500-60-WW

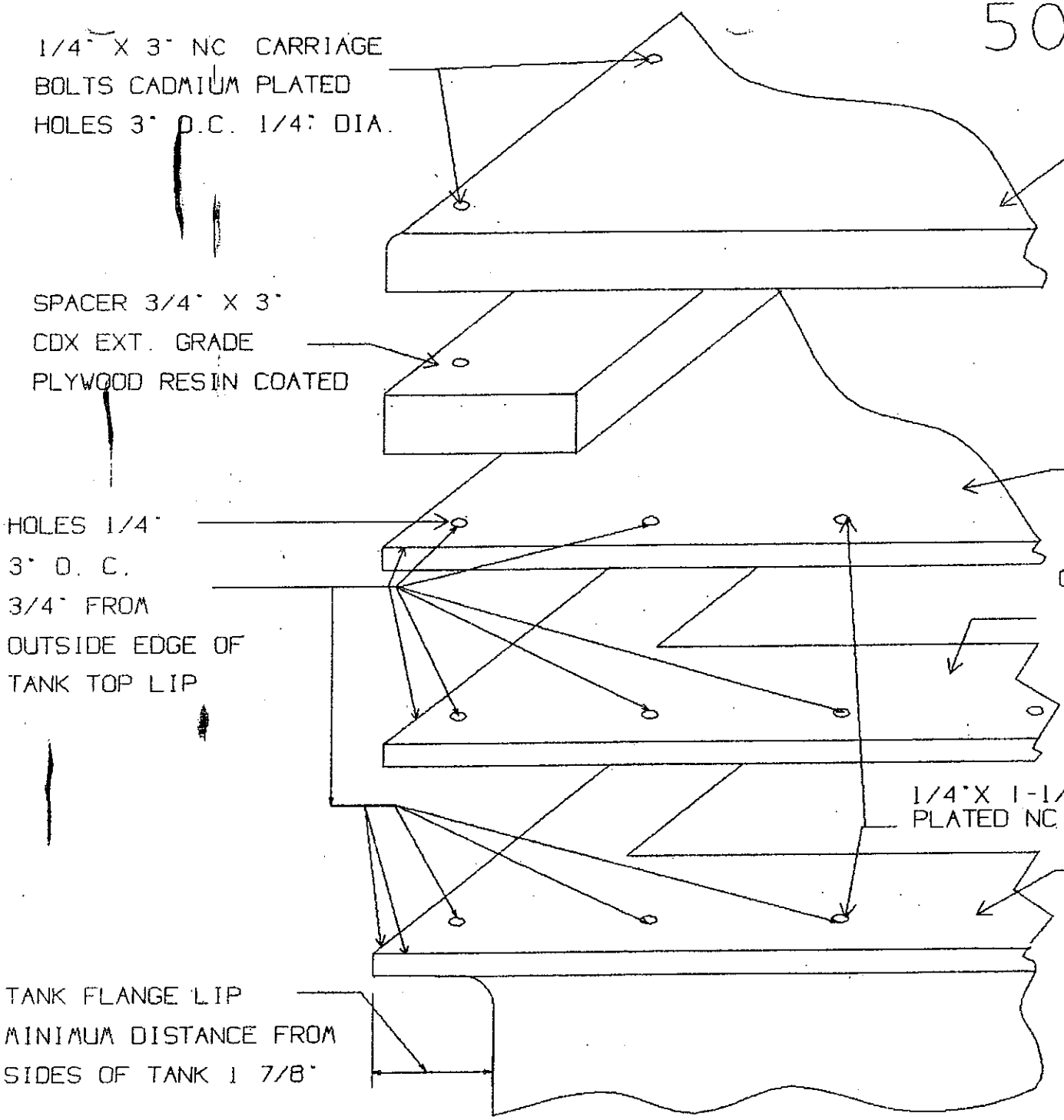

500 GALLON D.A.
J A W.
03/07

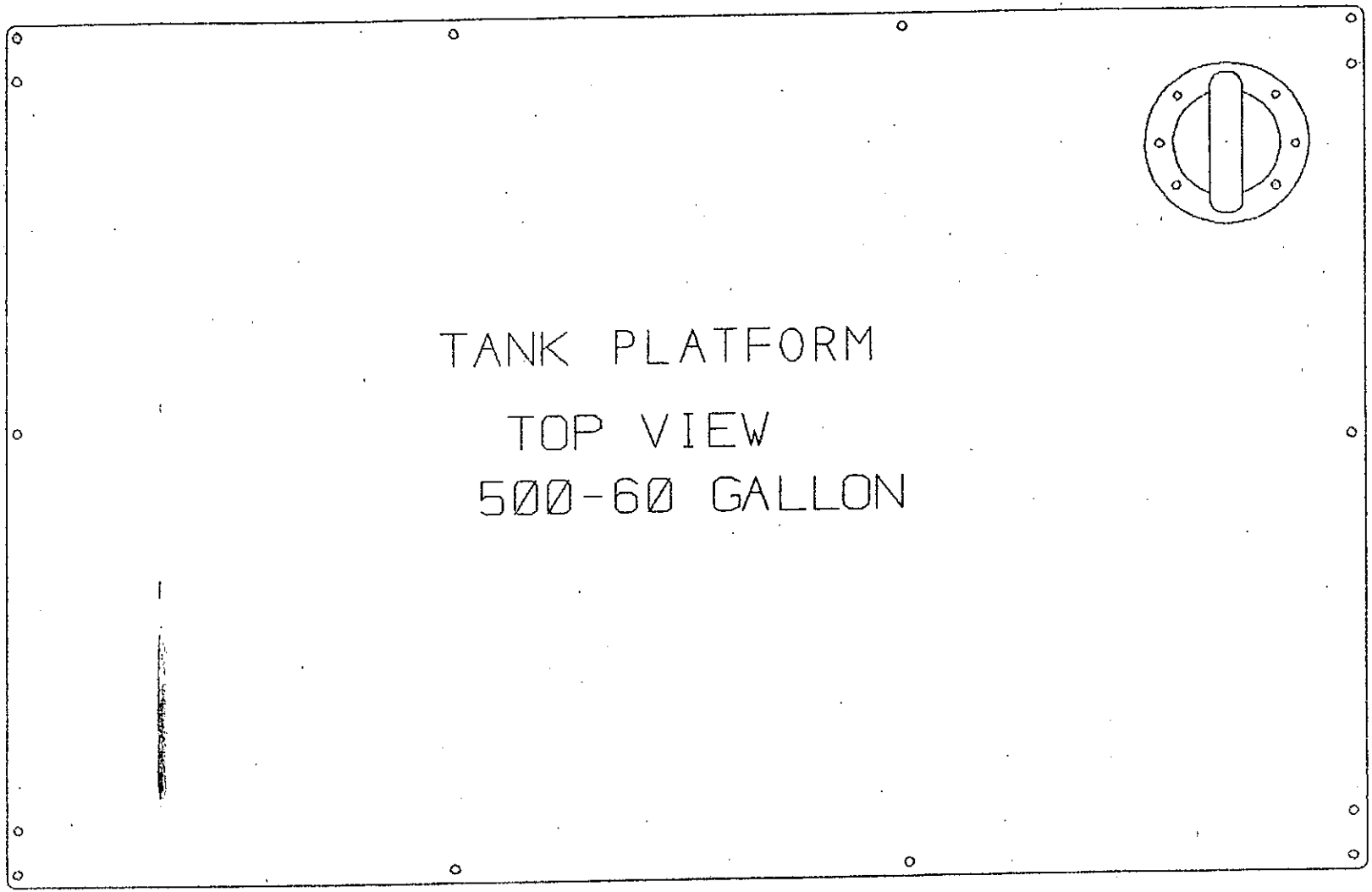

REAR
(BACK)
OF
TANK

500-60 GALLON
TANK PLFM
J.A.V.
03/07

TANK 500-60 GALLON

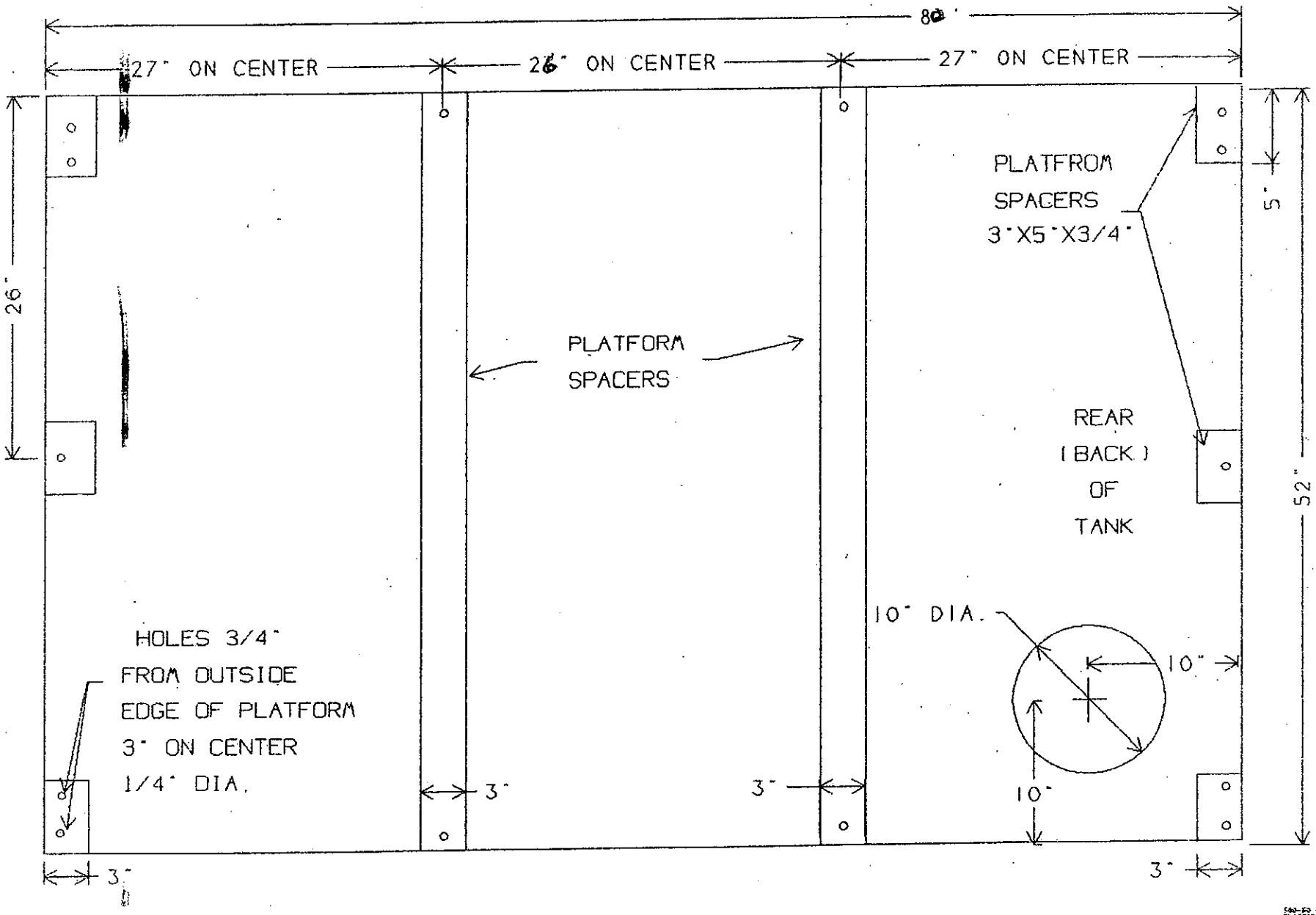

PLATFORM BOTTOM VIEW

TANK 500-HØ GALLON LID-BOTTOM VIEW

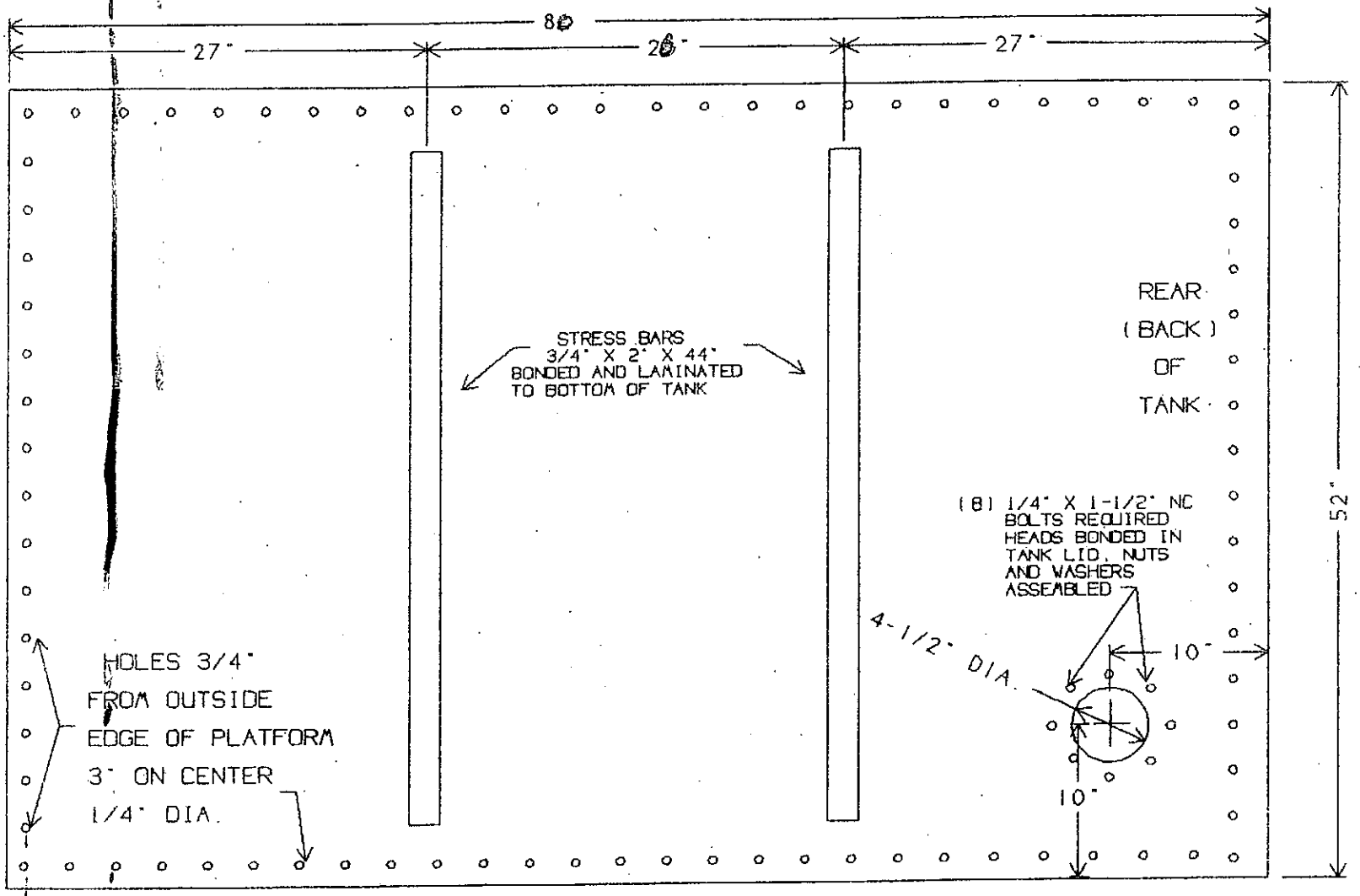

500-HØ GALLON
BOTTOM VIEW
LID J.A.W.
03/8H

500-60 GALLON TOP VIEW OF TANK

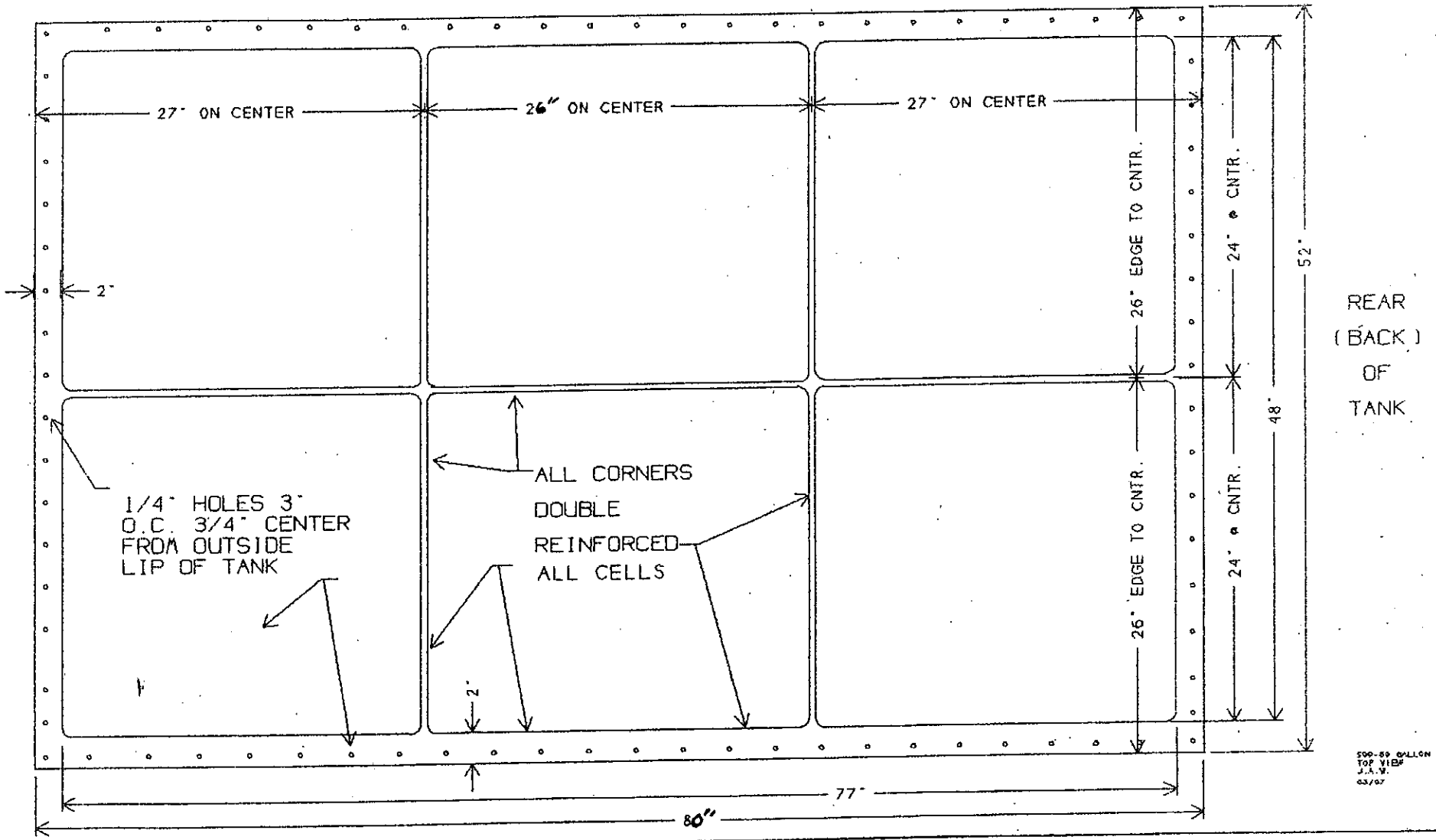

TANK 500-60 GALLON
SIDE VIEW

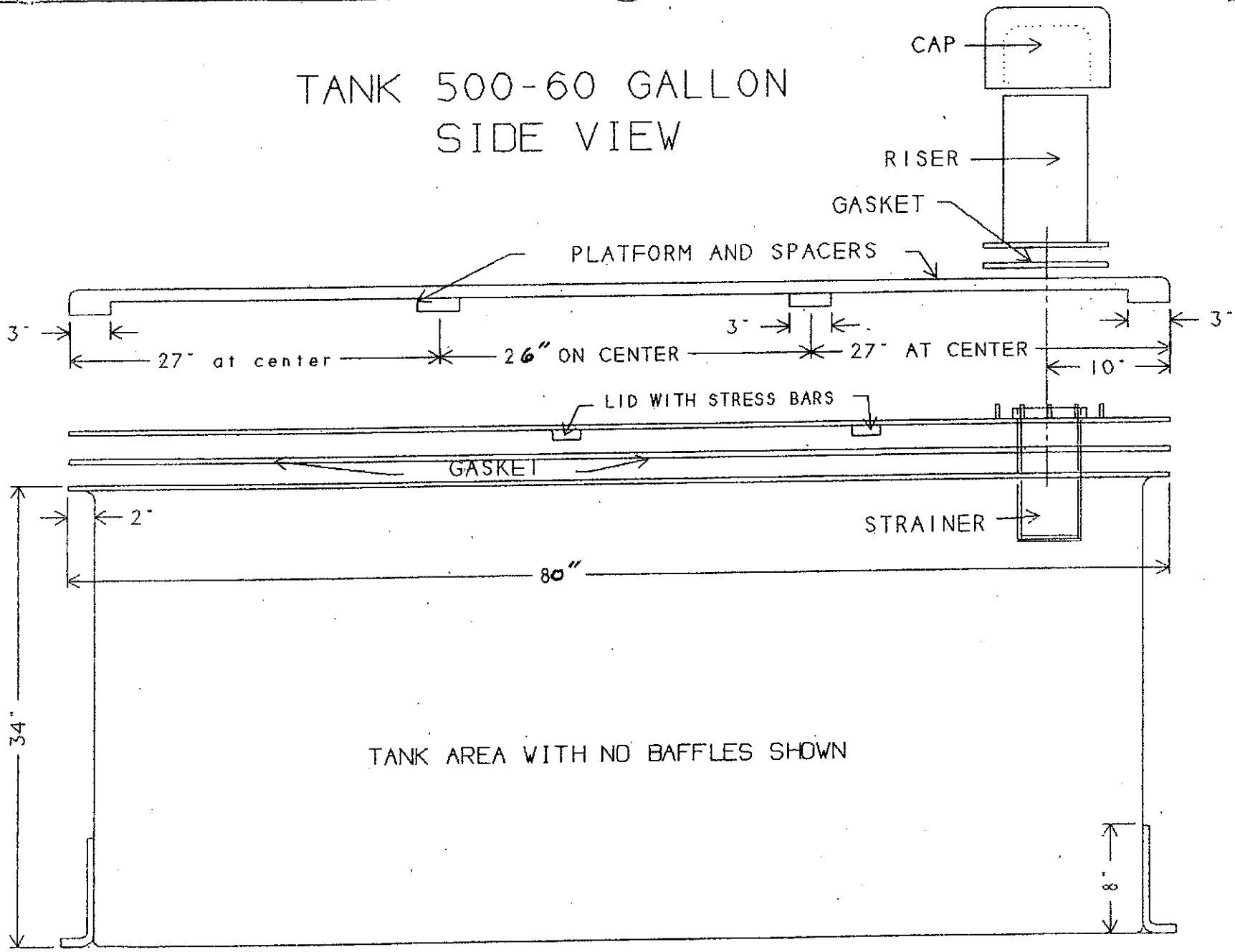

TANK 500-60 GALLON
SIDE VIEW-BAFFLES

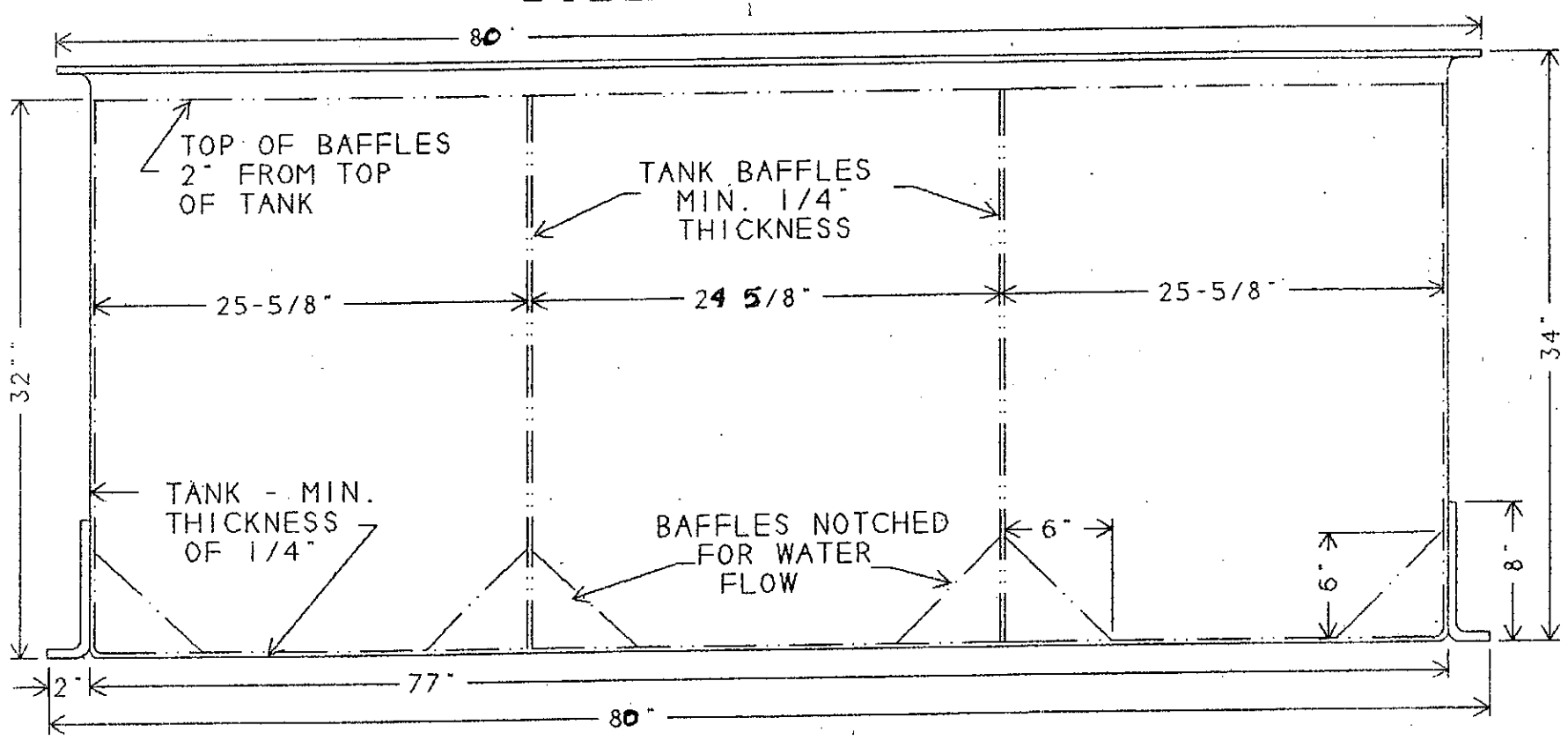

500-60 GALLON
J.A.V. 02/07

TANK 500-60 GALLON
REAR (BACK) VIEW

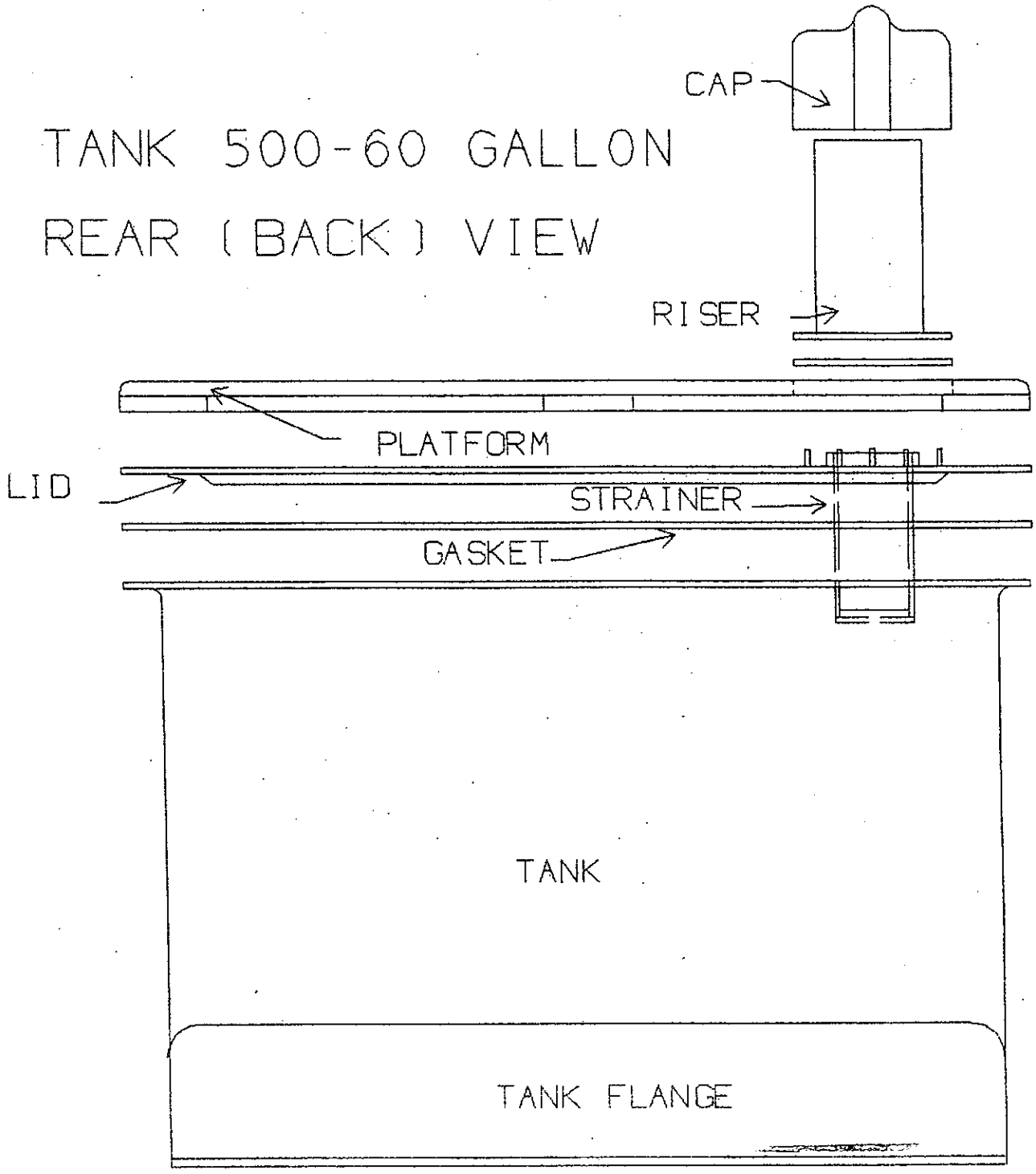

500-60 GALLON
J.A.M.
03/07

TANK 500-60 GALLON
REAR (BACK) VIEW

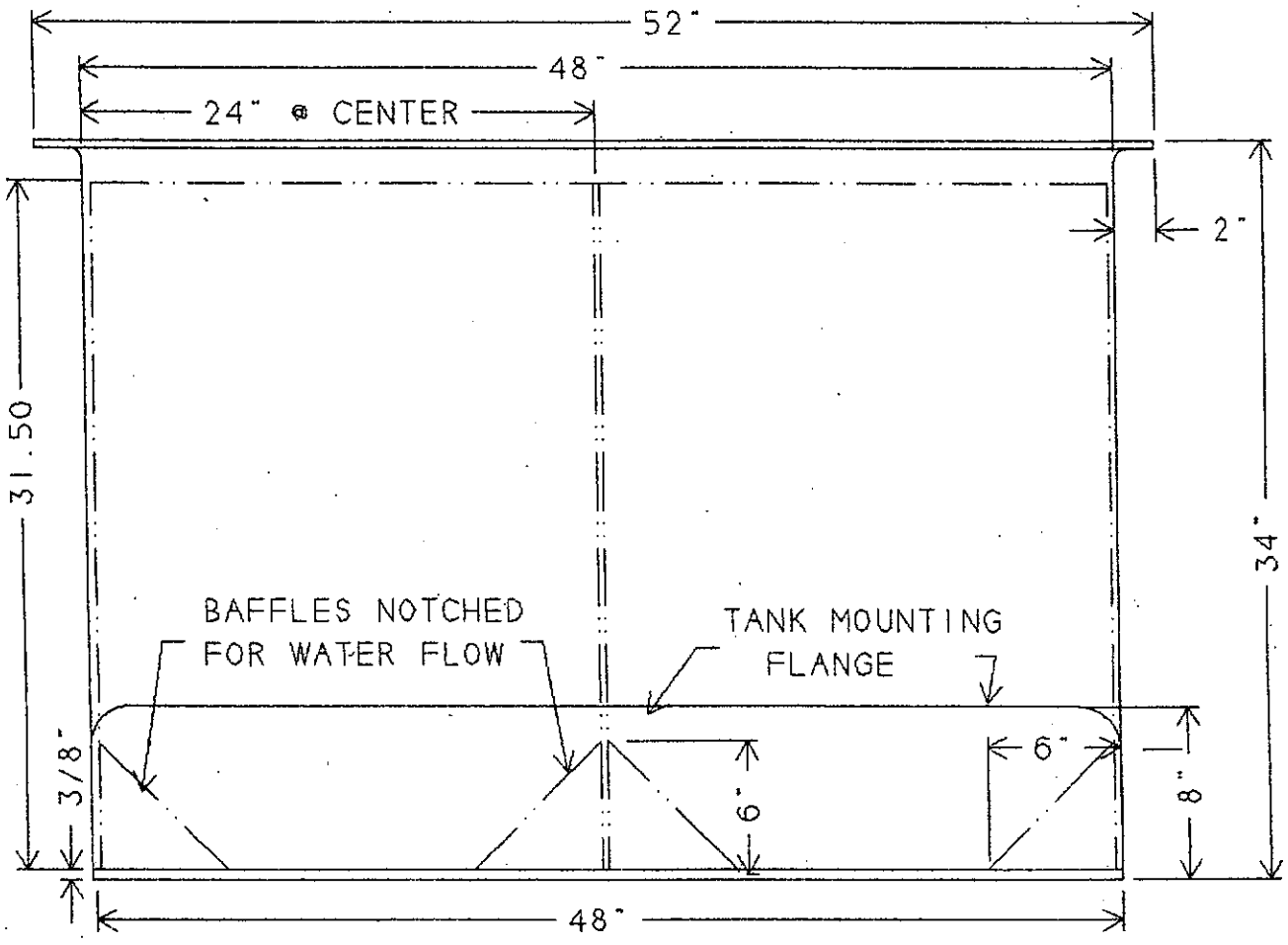

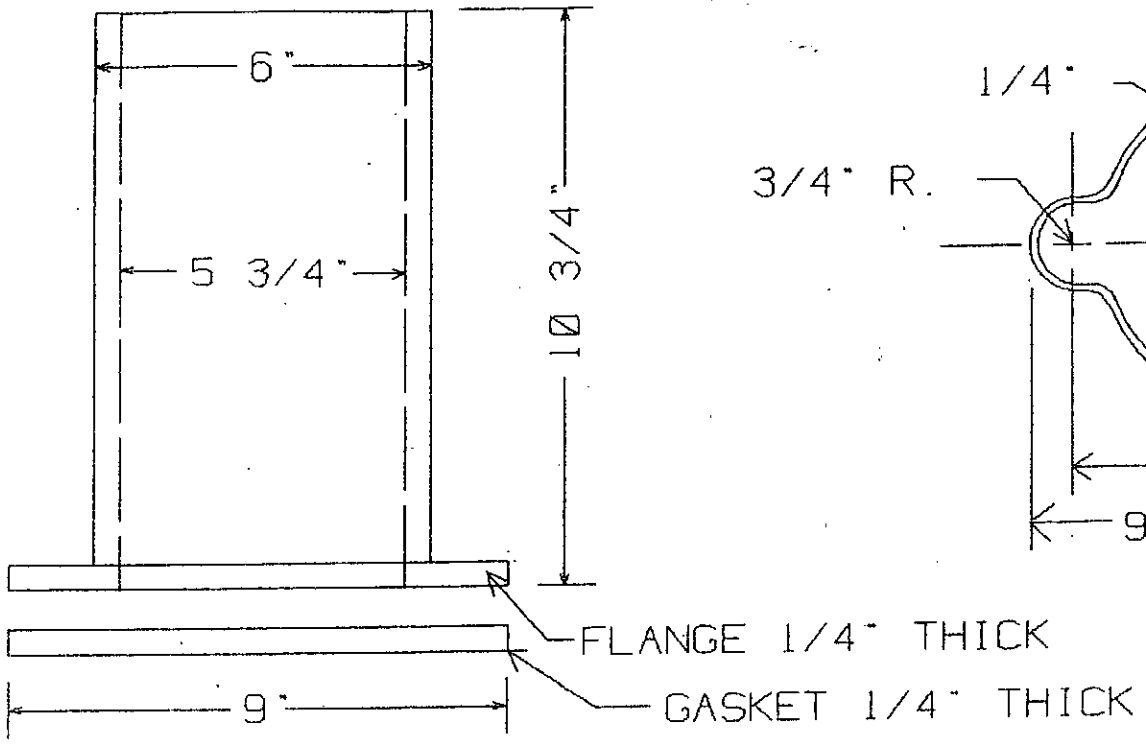

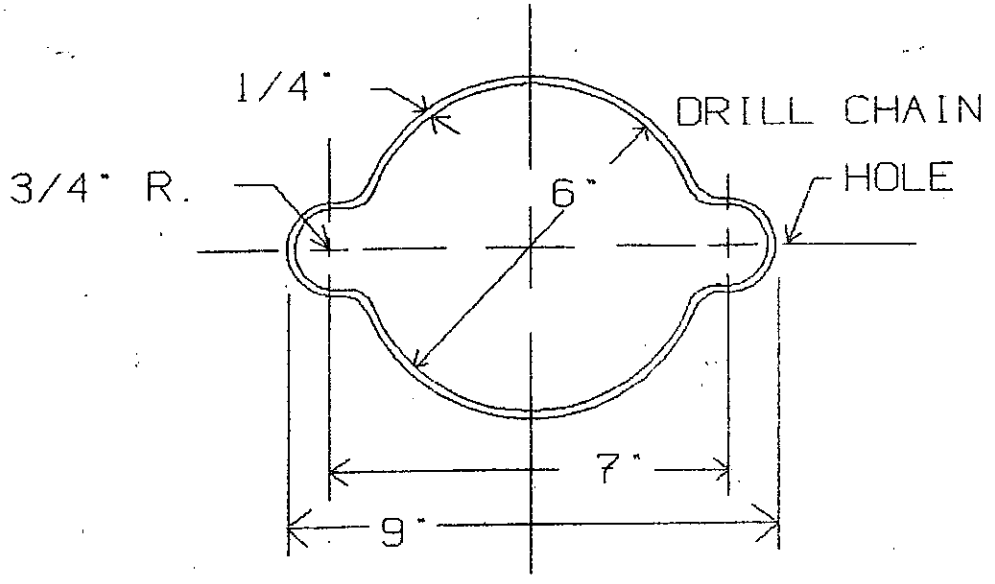

RISER (FILL VENT)

RISER CAP

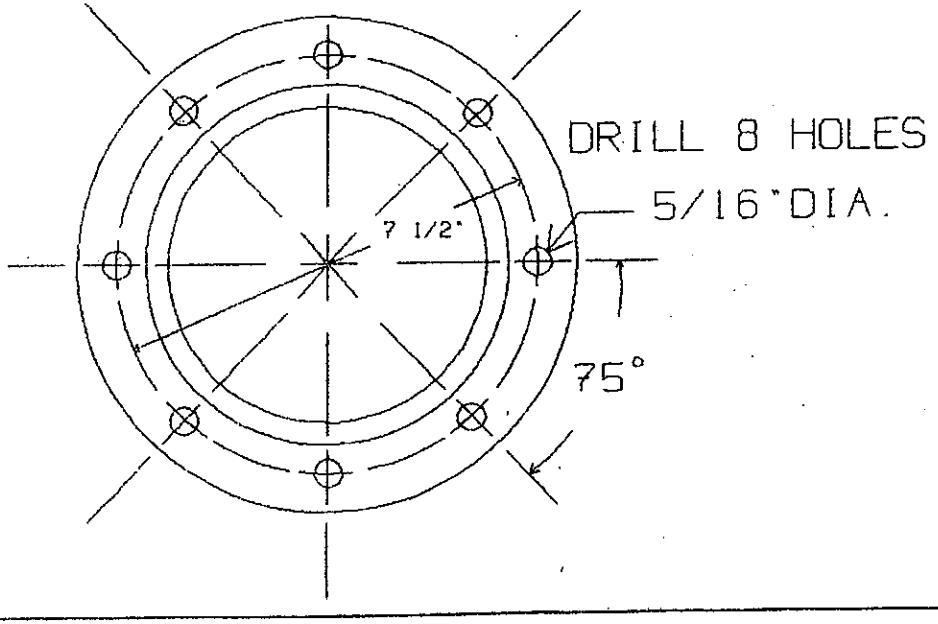

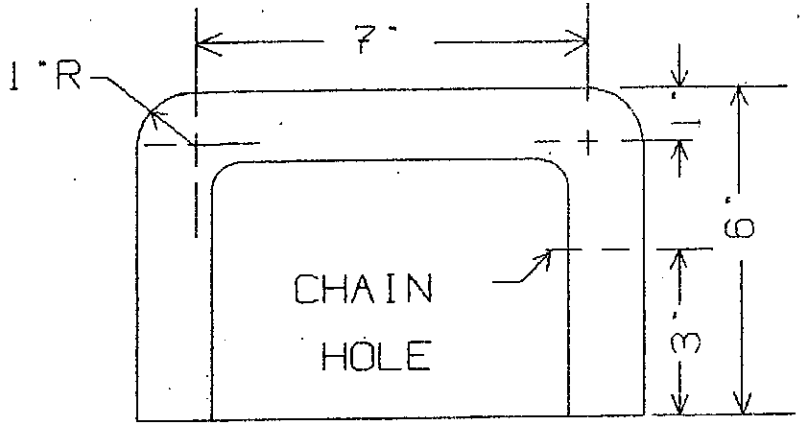

TANK-CAP.DWG
D.A.E. 11/89

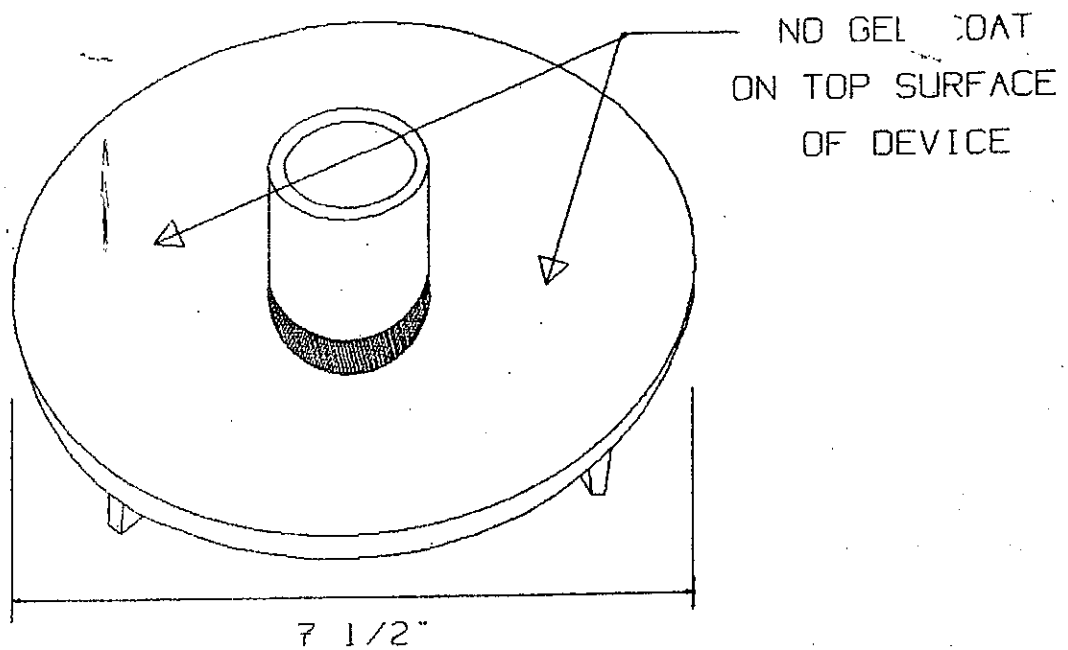

TOP VIEW

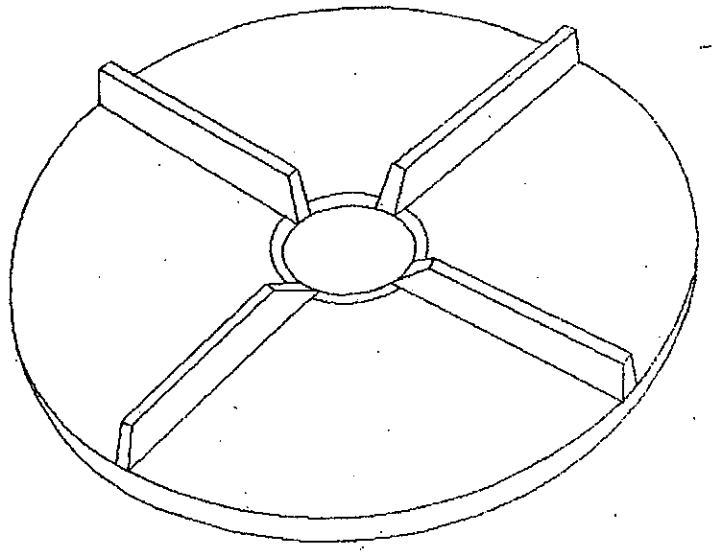

BOTTOM VIEW

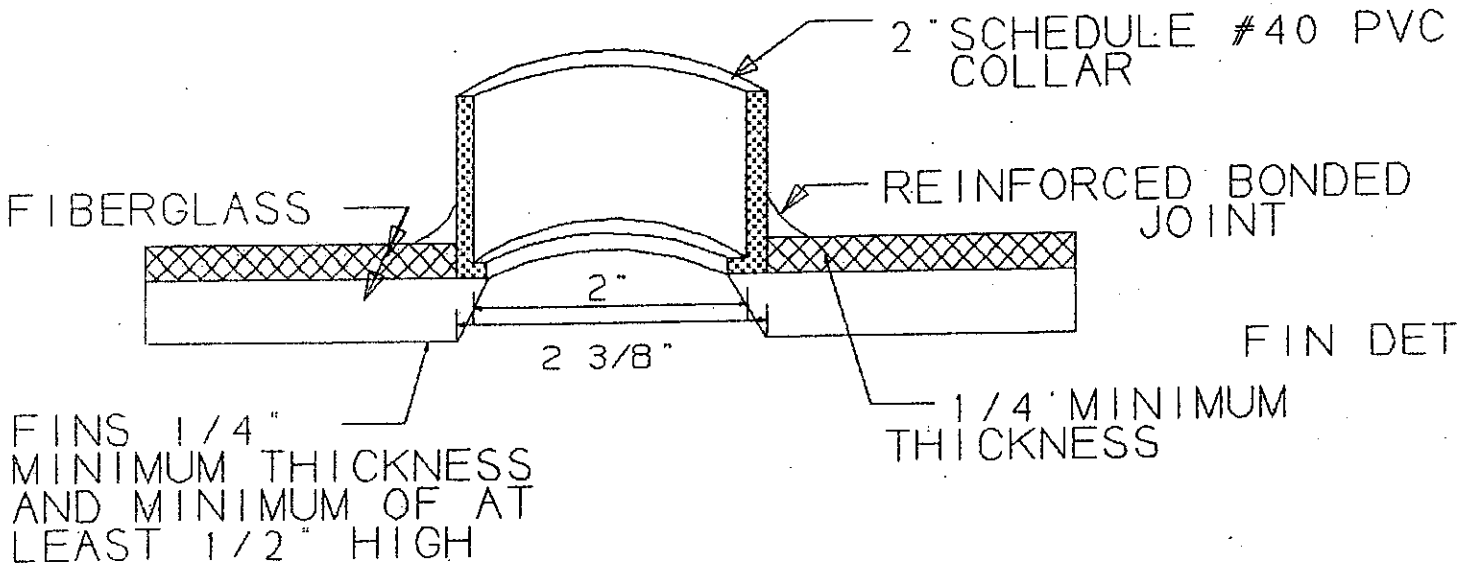

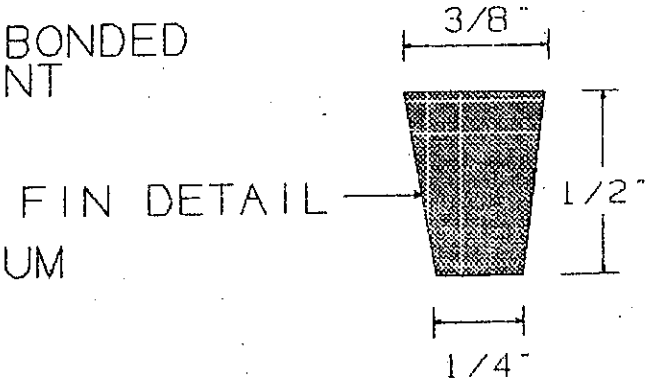

ANTI-CAVITATION DEVICE

A-C-DEV.DWG
D.A.E. 11\89