ROAD & BRIDGE PLANS
FOR

7.5 MILE BRIDGE REHABILITATION OVER SWIFT CREEK

SECTION 24, T. 33 N., R.23 W.
STILLWATER STATE FOREST

MONTANA DNRC

NORTHWEST LAND OFFICE

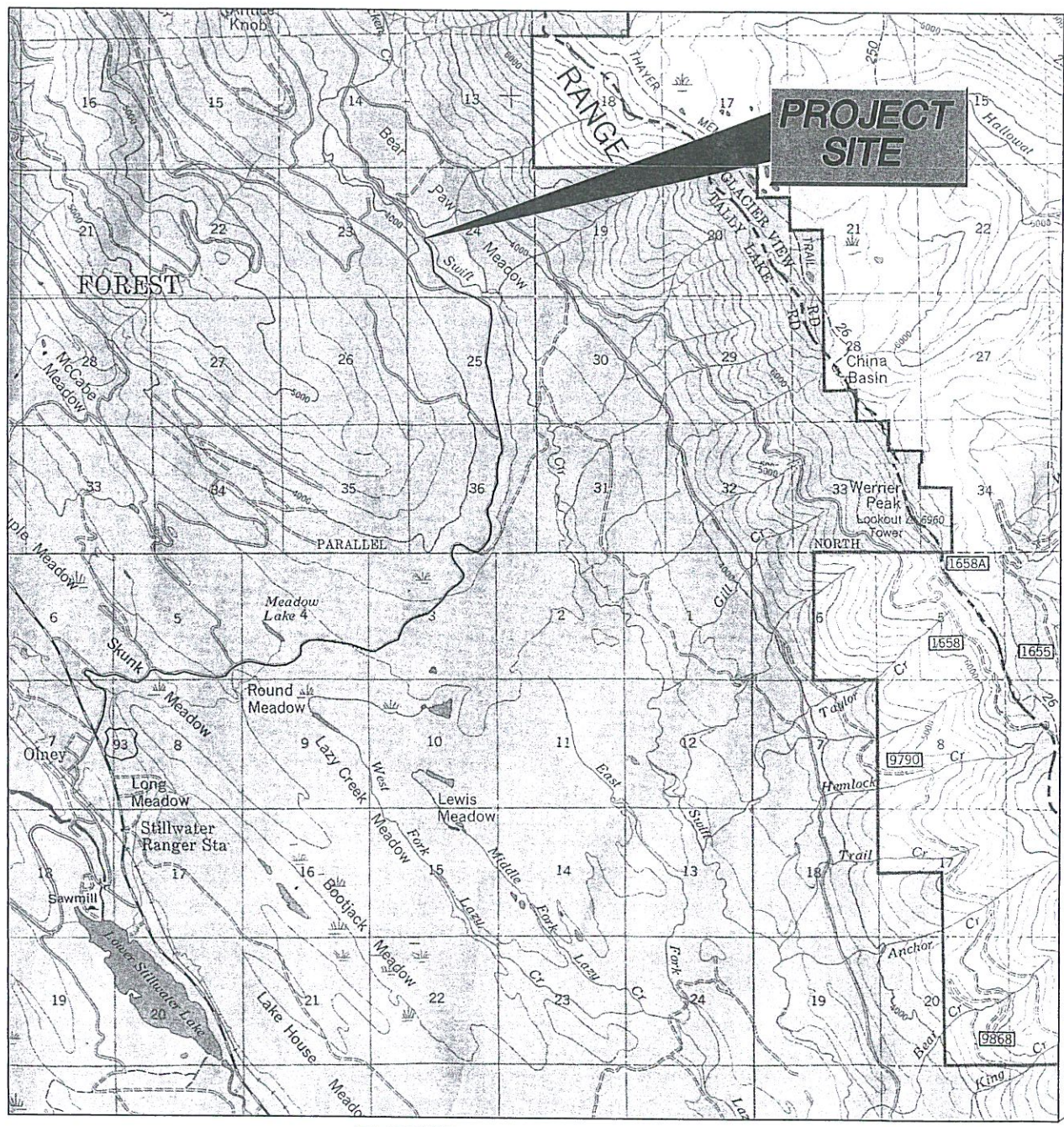

VICINITY MAP

INDEX TO SHEETS	
NO.	DESCRIPTION
1	TITLE SHEET
2	SUMMARY OF QUANTITIES AND GENERAL NOTES
3	GENERAL LAYOUT
4	WINGWALL AND BACKING PLANK GENERAL LAYOUT
5	WINGWALL DETAILS
6	PRECAST CONCRETE BACKING PLANKS GENERAL LAYOUT & DETAILS
7	EXISTING END DIAPHRAGM REPAIR DETAILS
8	BRIDGE RAIL & CURB LAYOUT & INSTALLATION DETAILS
9	PRECAST CONCRETE CURB PIECE DRAWINGS & DETAILS
10	APPROACH GUARDRAIL PLAN & GENERAL LAYOUT
11	APPROACH GUARDRAIL INSTALLATION DETAILS
12	APPROACH GUARDRAIL END ANCHORAGE DETAILS

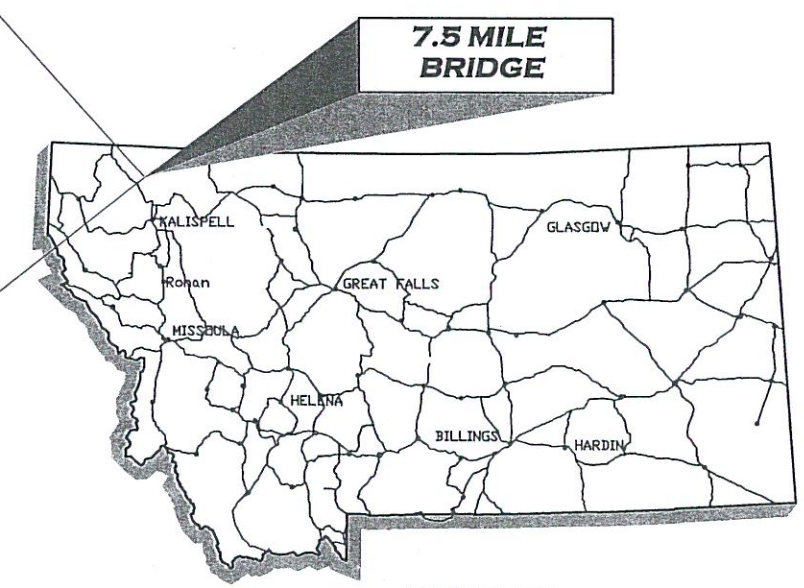

LOCATION MAP

DJ&A, P.C.
CONSULTING ENGINEERS & LAND SURVEYORS
3203 RUSSELL STREET, MISSOULA, MONTANA 59801-8591
PHONE 406/721-4320 FAX 406/549-6371

ESTIMATED QUANTITIES

PROJECT NAME 7.5 MILE BRIDGE REHABILITATION

ITEM	DESCRIPTION	Unit	PROJECT TOTALS
202(05)A	Removal of existing timber backing planks	L.S.	1
202(05)B	Removal of existing timber curb	L.S.	1
206(07)	Structural Excavation	L.S.	1
251(01)	Placed Riprap, Class 5, Method A	C.Y.	32
553A(01)A	Precast Concrete member, Wingwalls with Deadman	EACH	4
553A(01)B	Precast Concrete Member, Backing Planks	EACH	4
553A(01)C	Precast Concrete Member, Curb	EACH	8
556(01)	W-Beam (Double Layer), Type 1, Class A, Bridge Railing	L.F.	112.50
556(04)	Bridge Approach Railing, Type 1, Class A	L.F.	150.00
565(01)	Existing Concrete End Diaphragm Repair	L.S.	1
601(01)	Mobilization	L.S.	1

NOTE: ITEMS SHOWN ARE FOR INFORMATIONAL PURPOSES AND ARE INTENDED ONLY TO AID IN DESCRIBING THE WORK REQUIRED TO COMPLETE THE PROJECT. NO SEPARATE MEASUREMENT OR PAYMENT WILL BE MADE BASED ON THE ITEMS AND QUANTITIES SHOWN ABOVE. NEW ROAD EMBANKMENT SEPARATE FROM THE BRIDGE REHABILTATION PROJECT.

GENERAL NOTES:

SPECIFICATIONS: MATERIALS AND CONSTRUCTION OF THIS STRUCTURE SHALL BE IN ACCORDANCE WITH THE AUGUST, 1996 USDA- FOREST SERVICE SPECIFICATIONS FOR CONSTRUCTION OF ROADS AND BRIDGES, AS MODIFIED FOR THIS CONTRACT.

CONCRETE: Use Class A(AE) Precast concrete, F'c = 4000 psi at 28 days with an entrained air content of 5% ± 1%. Finish all precast (non-prestressed) elements with a Class 2- Rubbed Finish.

Make all concrete in accordance with an approved mix design. Chamfer all exposed edges of concrete and fillet all re-entrant angles 3/4" unless otherwise noted.

REINFORCING STEEL: Use non-prestressed reinforcing of the deformed type conforming to AASHTO M31 (ASTM A615), Grade 60. Concrete cover shall be as shown; where not shown it shall conform to AASHTO. Cut and bend steel in accordance with ACI 315.

HARDWARE AND STRUCTURAL STEEL: Use steel shapes, plates and bars meeting the requirements of AASHTO M183 (ASTM A36). Galvanize all steel in accordance with AASHTO M111 (ASTM A123) except when covered by 1 inch or more of concrete. Use hardware meeting the requirements of ASTM A307 except as noted. Galvanize hardware in accordance with AASHTO M232 (ASTM A153) unless covered by 1 inch or more of concrete.

DISPOSAL OF MATERIALS: All materials designated for removal are considered unsalvageable and are to be the property of the Contractor. The Contractor is responsible for removing these materials from State Forest Lands and disposing them in an environmentally safe manner that meets all local, state and federal regulations.

SHORING/STRUCTURAL EXCAVATION: Prior to construction, submit an Excavation Plan for review outlining the Contractor's plan for excavation and backfilling behind the structure. Including how the structure will be braced to resist lateral loads or alternate steps that will be taken to insure that the structure does not move laterally, and that work can proceed in a safe manner.

STRUCTURAL BACKFILL: Backfill behind the bridge and wingwalls with free draining granular material free of excess moisture, muck, frozen lumps, roots, sod, or other deleterious material conforming to the following:

(a) Maximun particle size — 3 inches

(b) Material passing No. 200 sieve — 15% max.

(c) Liquid Limit — 30% max.

Place material in horizontal lifts that do not exceed 6" in compacted thickness. Ensure that material has a moisture content suitable for attaining the required compaction. Operate compaction equipment over the full width of each layer untill visible deformation of the layer ceases.

BY	DATE	REVISION DESCRIPTION

DESIGN ____ PROJ. NO. ____
DRAWN MTJ DATE ____
CHECKED ____

DJ&A, P.C.
CONSULTING ENGINEERS & LAND SURVEYORS
3203 Russell Street, Missoula, Montana 59801-6691
Phone 406/721-4320 Fax 406/549-6971

DNRC
STILLWATER STATE FOREST
7.5 MILE BRIDGE

SUMMARY OF QUANTITIES
AND GENERAL NOTES

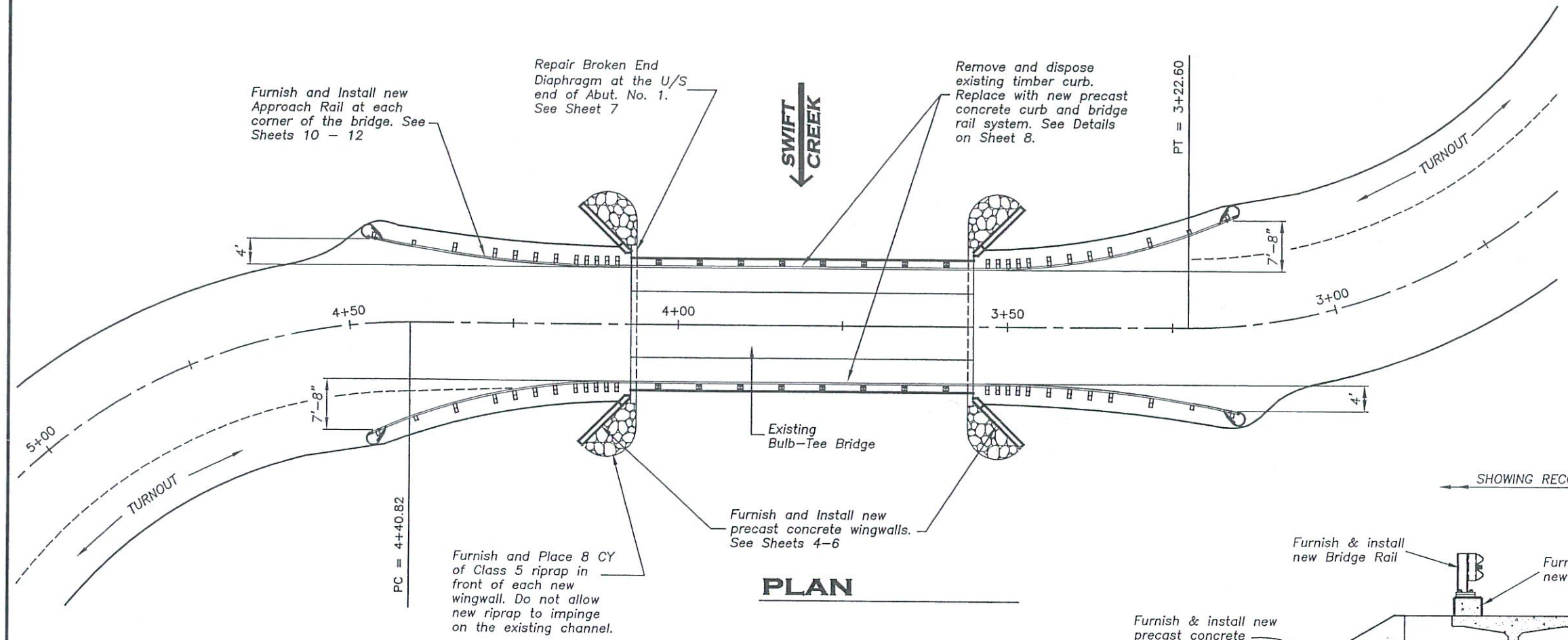

PLAN

SHORING:

Provide shoring, bracing, falsework, etc. as necessary to keep all structural elements stable and safe during construction. Provide temporary lateral bracing of both ends of the bridge during installation of new wingwalls and backing planks. Do not excavate behind the ends of the bridge until the structure is adequately braced or that alternate steps have been taken to insure that no lateral movement of the structure will occur and that work can proceed in a safe manner. Remove and dispose of all bracing, shoring, etc. after completing construction.

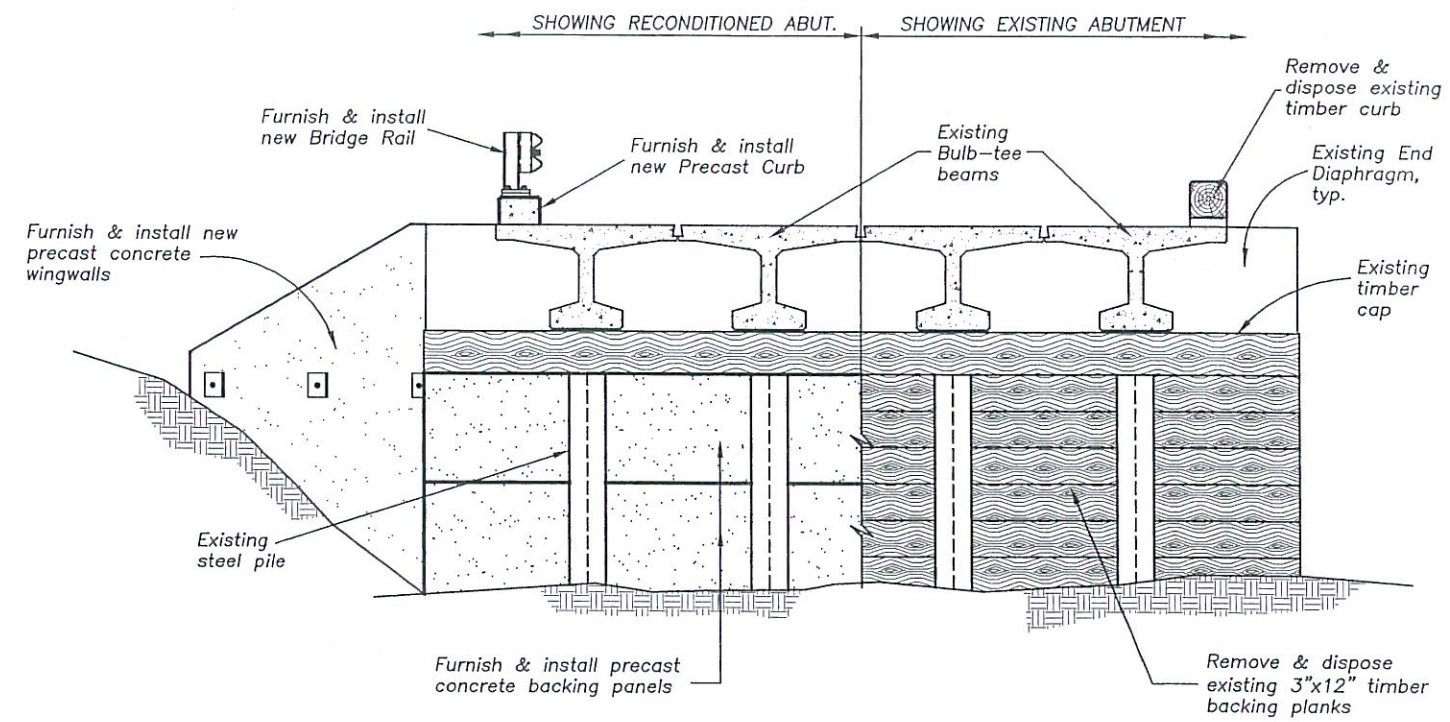

TYPICAL SECTION

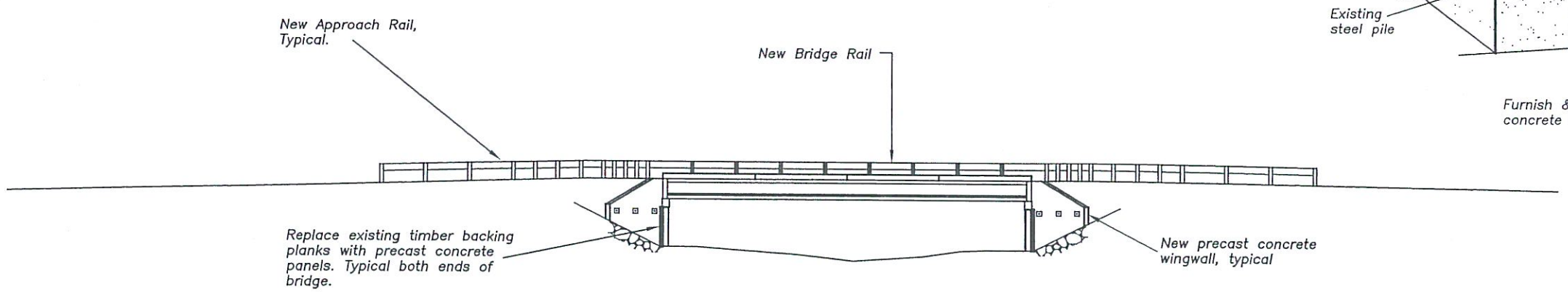

ELEVATION

BY	DATE	REVISION DESCRIPTION

DESIGN MTJ PROJ. NO. 5074
DRAWN MTJ DATE 2/06
CHECKED

D&A, P.C.
CONSULTING ENGINEERS & LAND SURVEYORS
3203 Russell Street, Missoula, Montana 59801-6591
Phone 406721-4320 Fax 406549-6371

DNRC
STILLWATER STATE FOREST
7.5 MILE BRIDGE

GENERAL LAYOUT

SHEET 3 OF 12

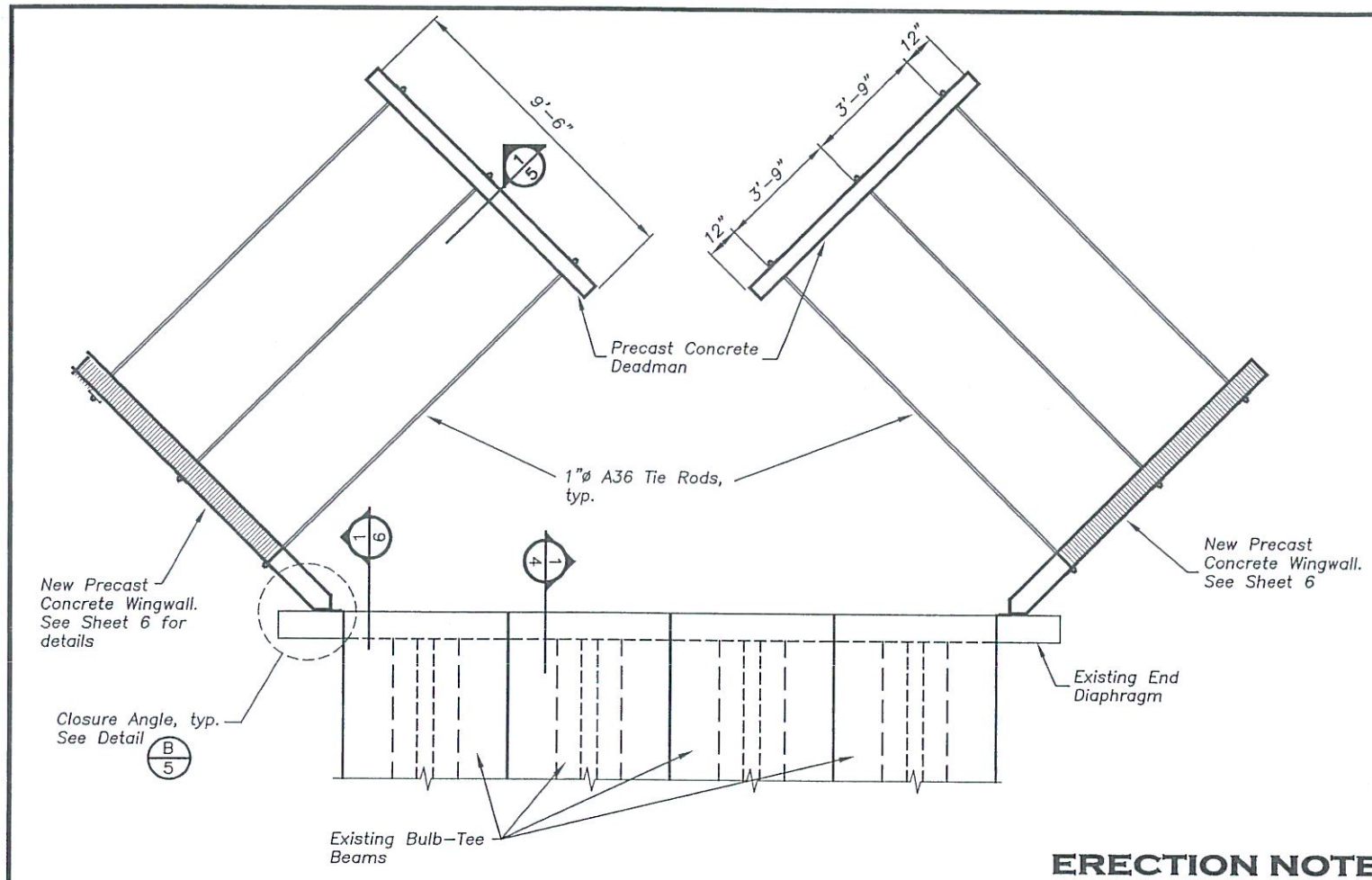

ABUTMENT PLAN

Scale: 1/4" = 1'-0"

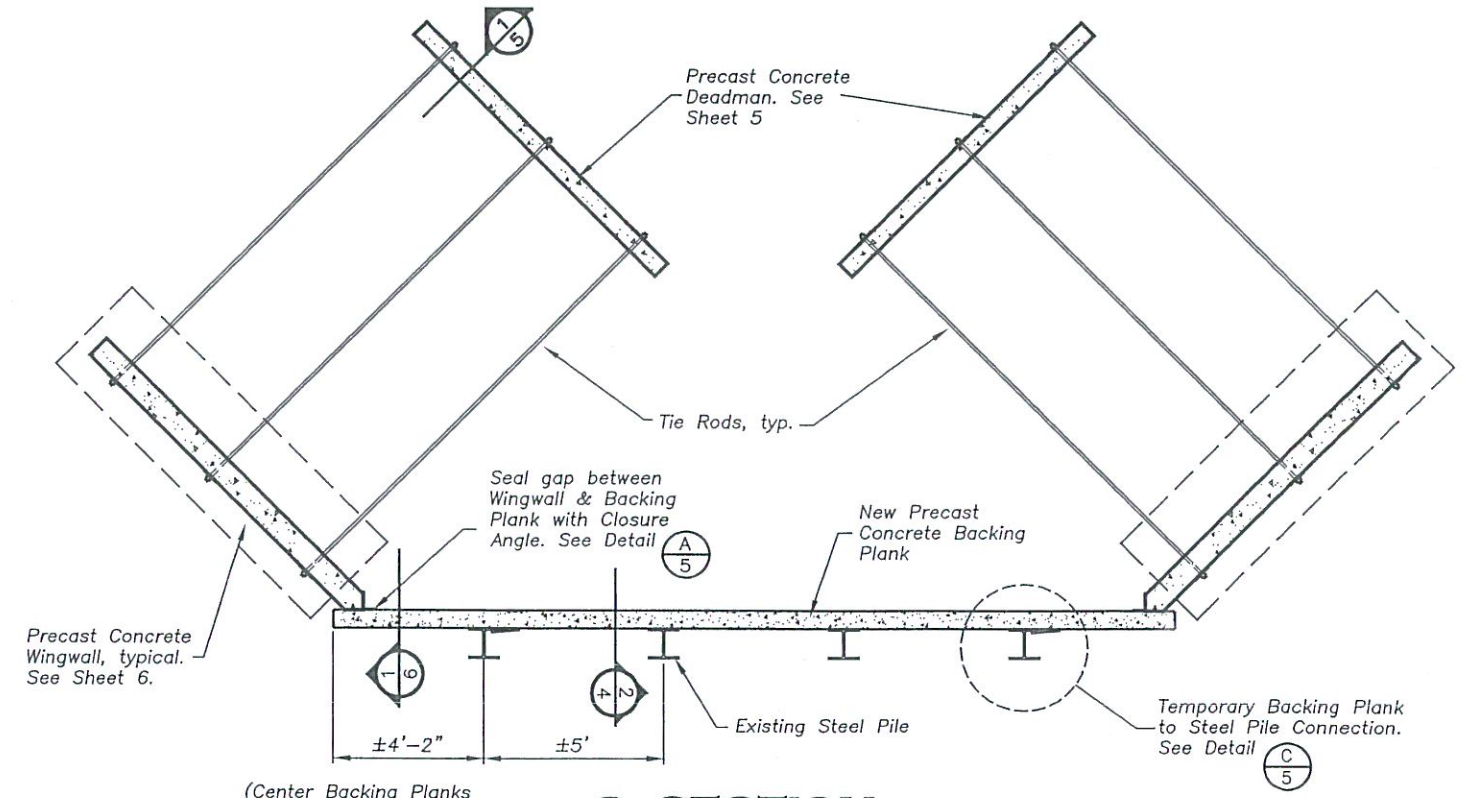

1/4 SECTION

Scale: 3/16" = 1'-0"

ERECTION NOTES:

1.) After erecting the new Backing Planks and Wingwalls bring backfill up evenly on both ends of the bridge so that not more than 2 feet of elevation difference exists between the backfill behind either end, or provide bracing to insure that no lateral movement of the structure will occur.

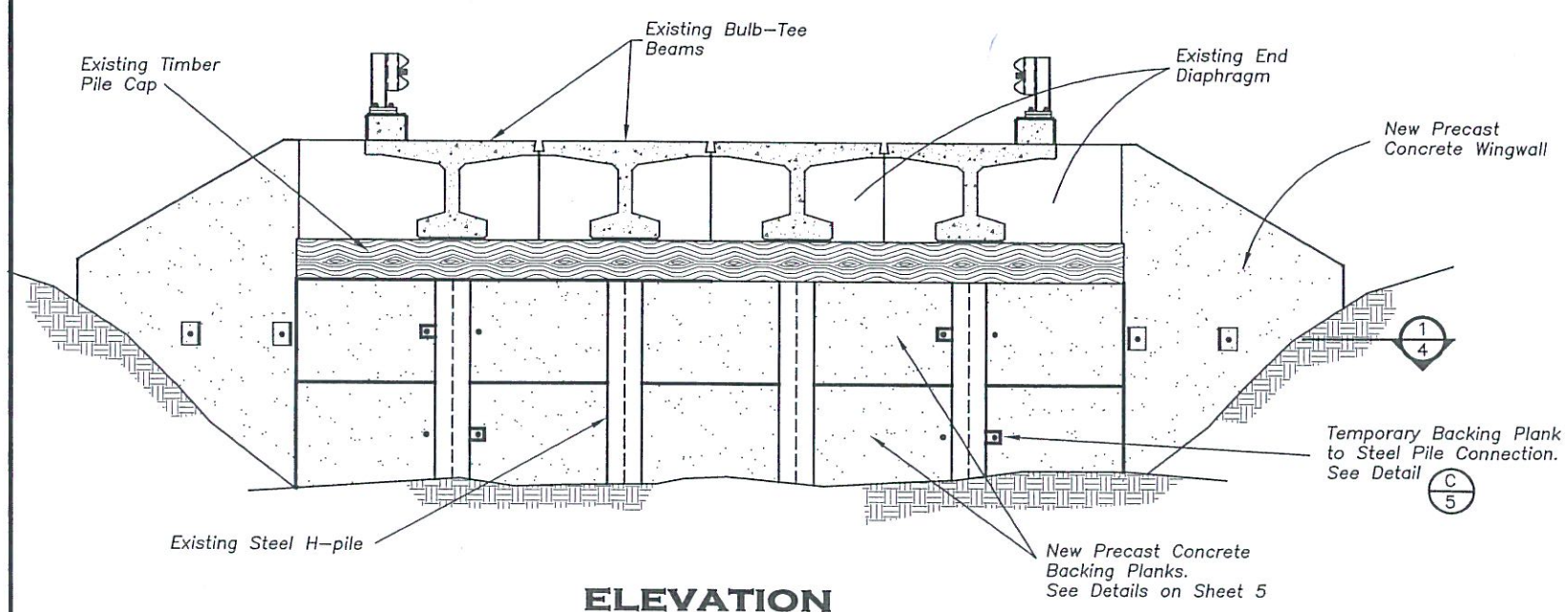

ELEVATION

Scale: 1/4" = 1'-0"

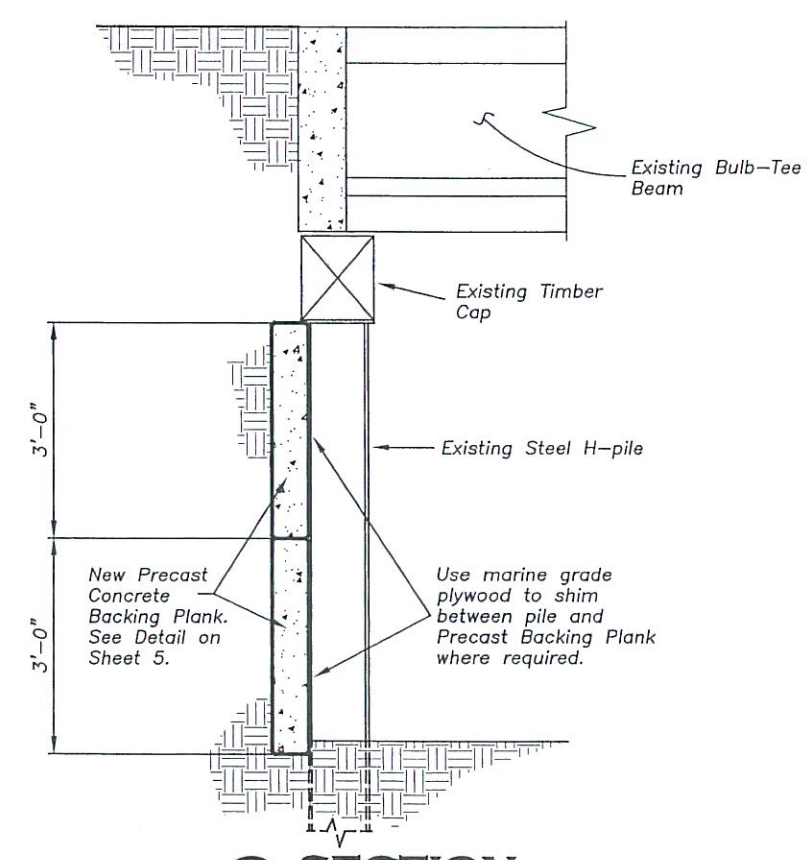

2/4 SECTION

Scale: 3/8" = 1'-0"

BY	DATE	REVISION DESCRIPTION

DESIGN MTJ PROJ. NO. 5074
DRAWN MTJ DATE 2/06
CHECKED

D&A, P.C.
CONSULTING ENGINEERS & LAND SURVEYORS
3203 Russell Street, Missoula, Montana 59801-6391
Phone 406/721-4320 Fax 406/549-6371

DNRC
STILLWATER STATE FOREST
7.5 MILE BRIDGE

WINGWAL AND BACKING PLANK
GENERAL LAYOUT
AND SECTIONS

SHEET 4 OF 12

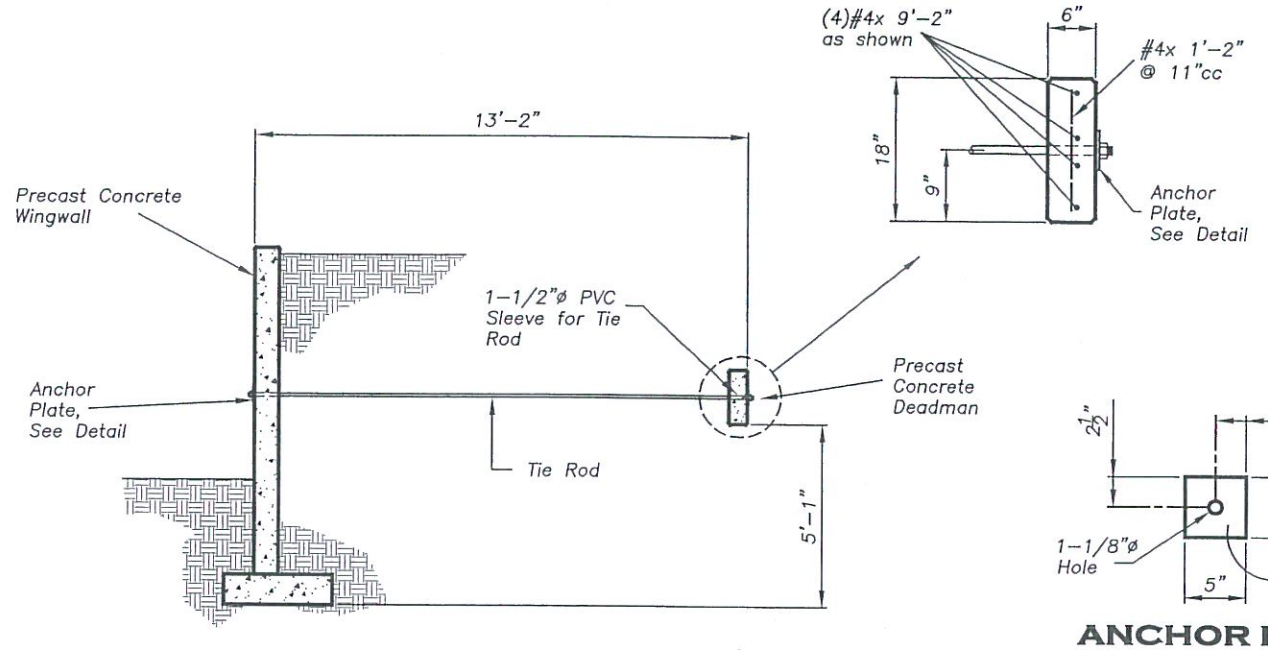

1/5 **SECTION**

Scale: 1/4" = 1'-0"

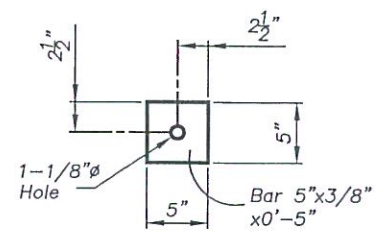

ANCHOR PLATE DETAIL

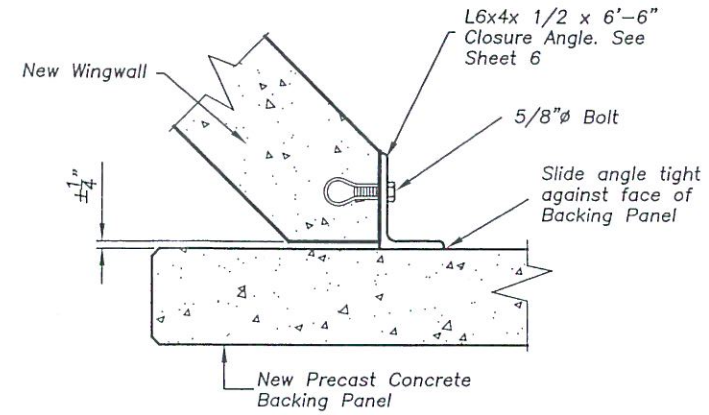

A/5 **DETAIL CLOSURE ANGLE**

Not to Scale

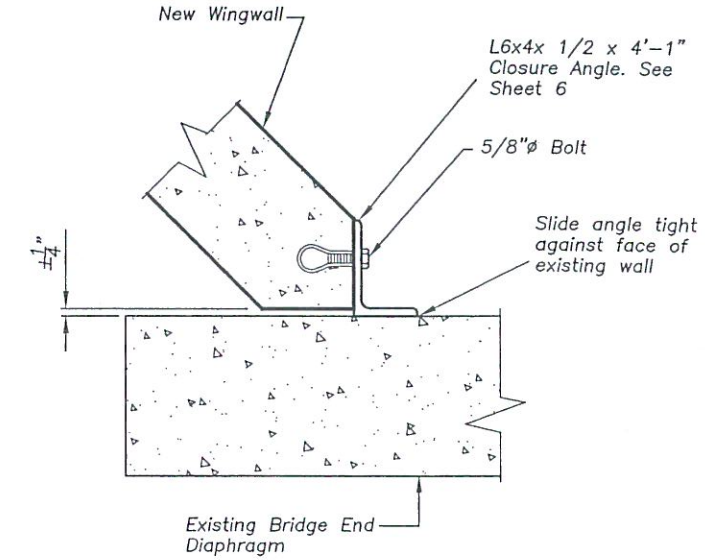

B/5 **DETAIL CLOSURE ANGLE**

Not to Scale

WINGWALL ERECTION NOTES:

1.) Support tie rods during erection with earth or other approved means at approximately 5' centers. Adjust the exposed tie rod nuts periodically during backfilling to keep the wingwalls true and plumb. Burr the threads on the tie rods after final postioning of the nuts to prevent loosening. Furnish tie rods with a minimum of 9" of threads on each end.

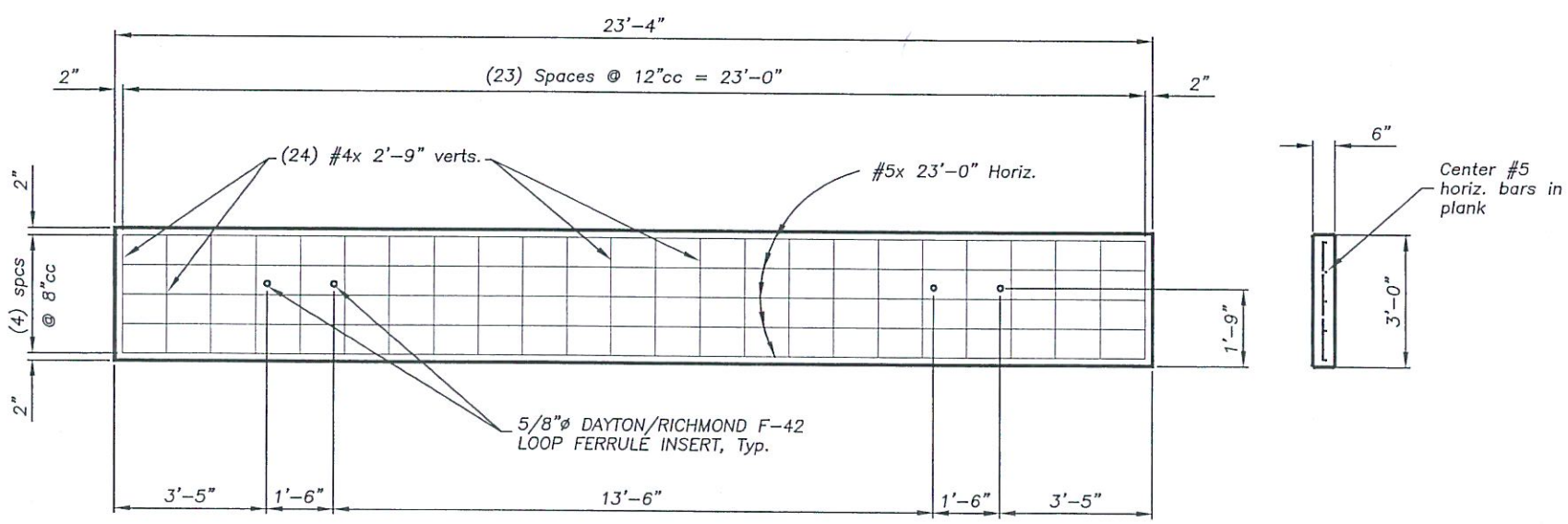

TYPICAL BACKING PLANK

Scale: 3/8" = 1'-0"

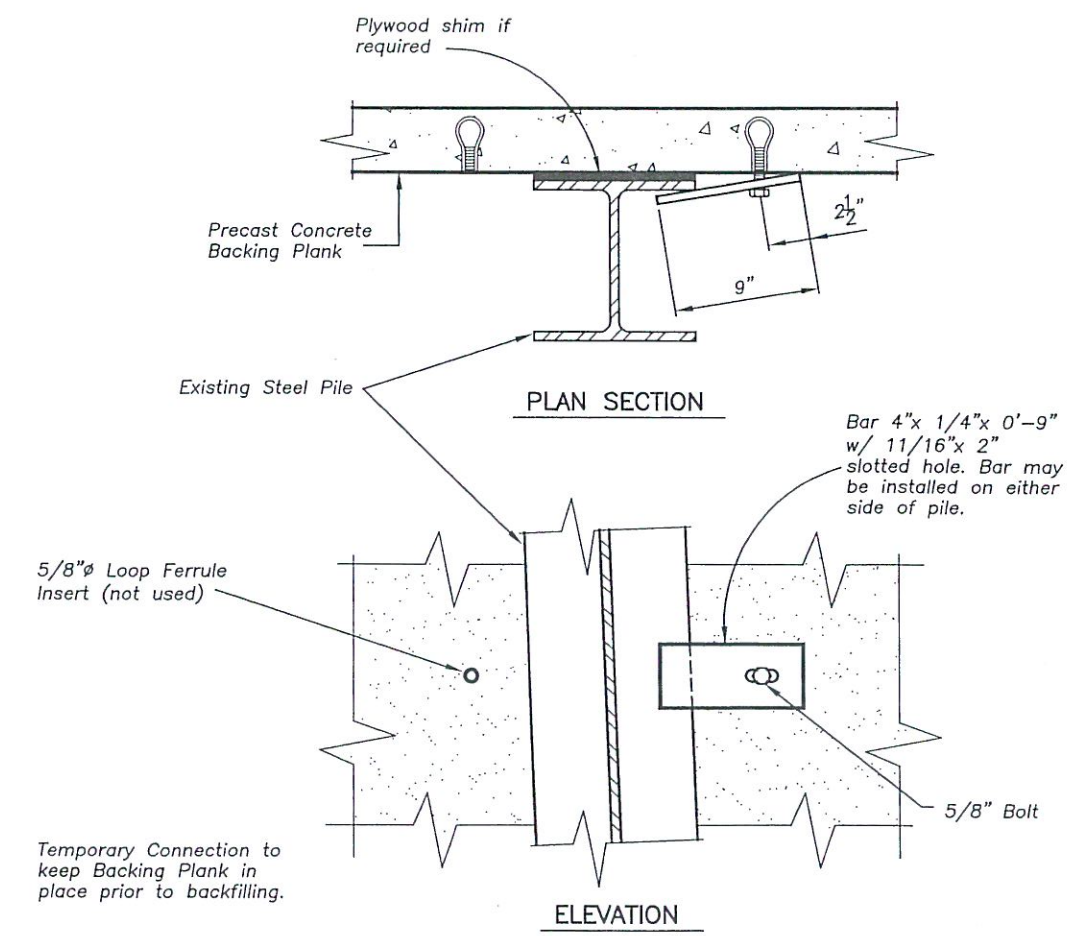

C/5 **DETAIL**

Scale: 1" = 1'-0"

BY	DATE	REVISION DESCRIPTION

DESIGN MTJ PROJ. NO. 5074
DRAWN MTJ DATE 2/06
CHECKED

DJ&A, P.C.
CONSULTING ENGINEERS & LAND SURVEYORS
3203 Russell Street, Missoula, Montana 59801-8591
Phone 406721-4320 Fax 406549-6371

DNRC
STILLWATER STATE FOREST
7.5 MILE BRIDGE

WINGWAL AND BACKING PLANK DETAILS

SHEET 5 OF 12

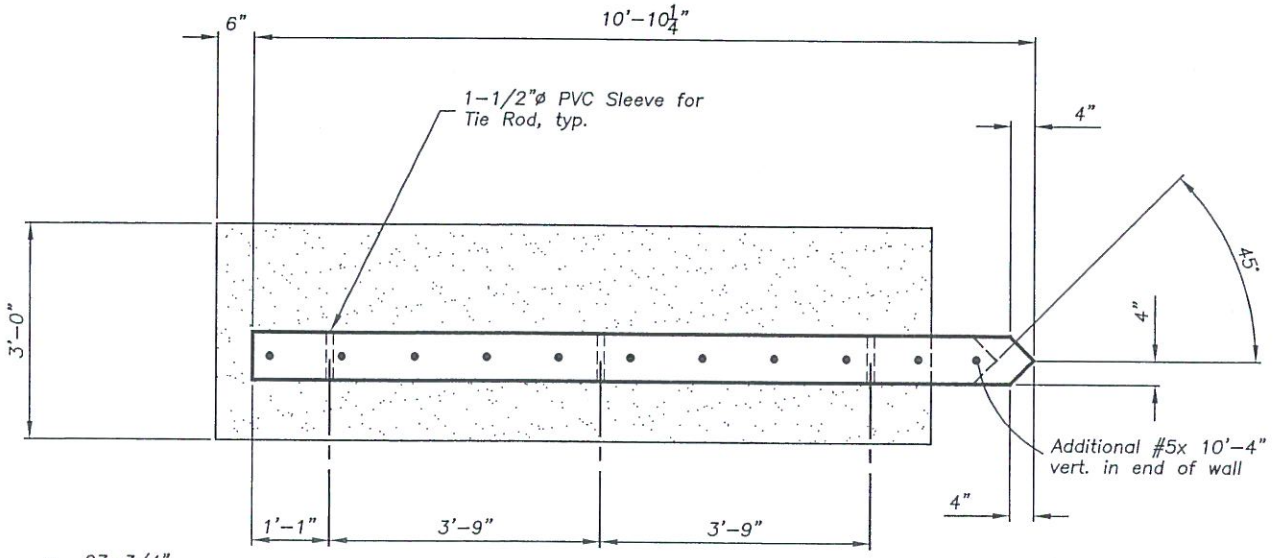

PLAN

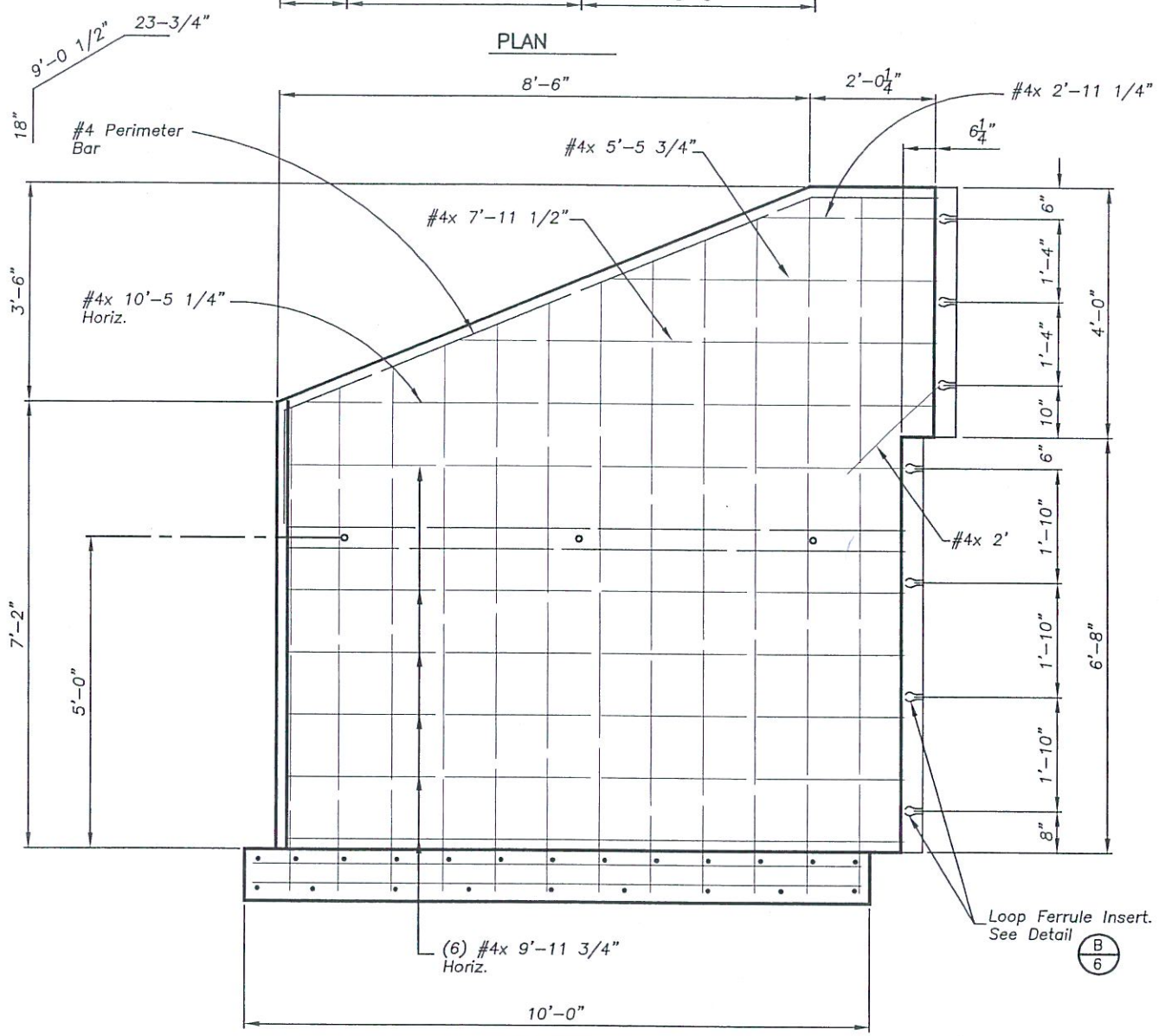

ELEVATION

A/6 **DETAIL**
Scale: 3/8" = 1'-0"

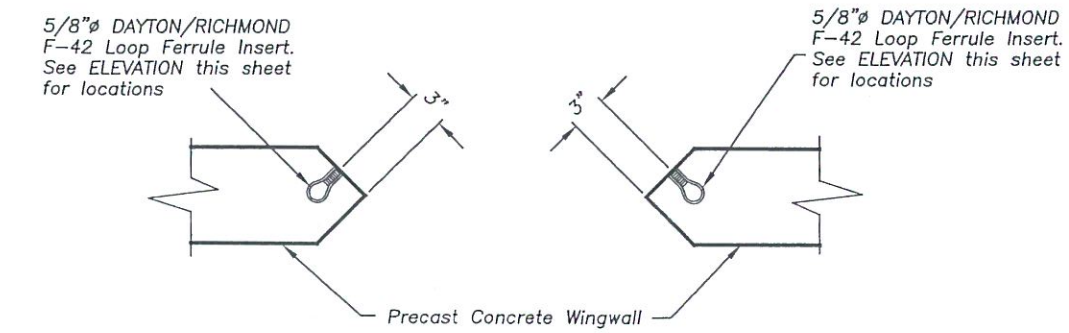

B/6 **DETAIL**
Scale: 3/4" = 1'-0"

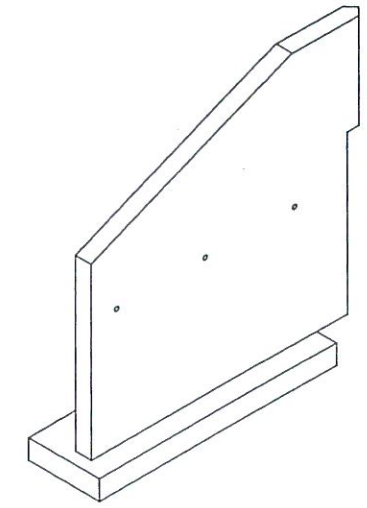

ISOMETRIC VIEW

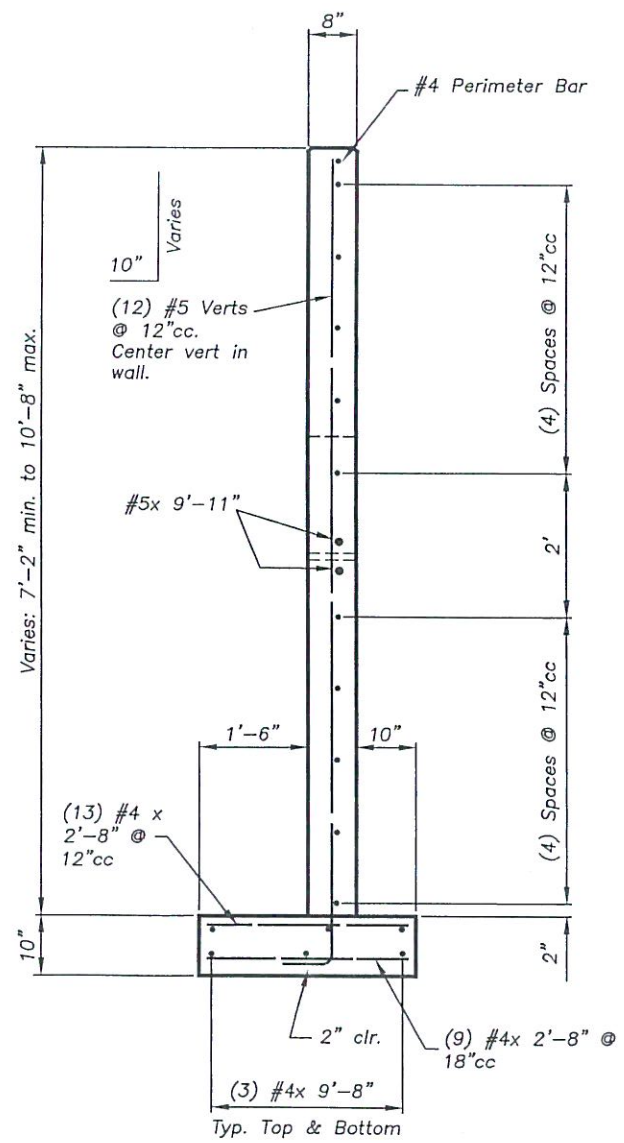

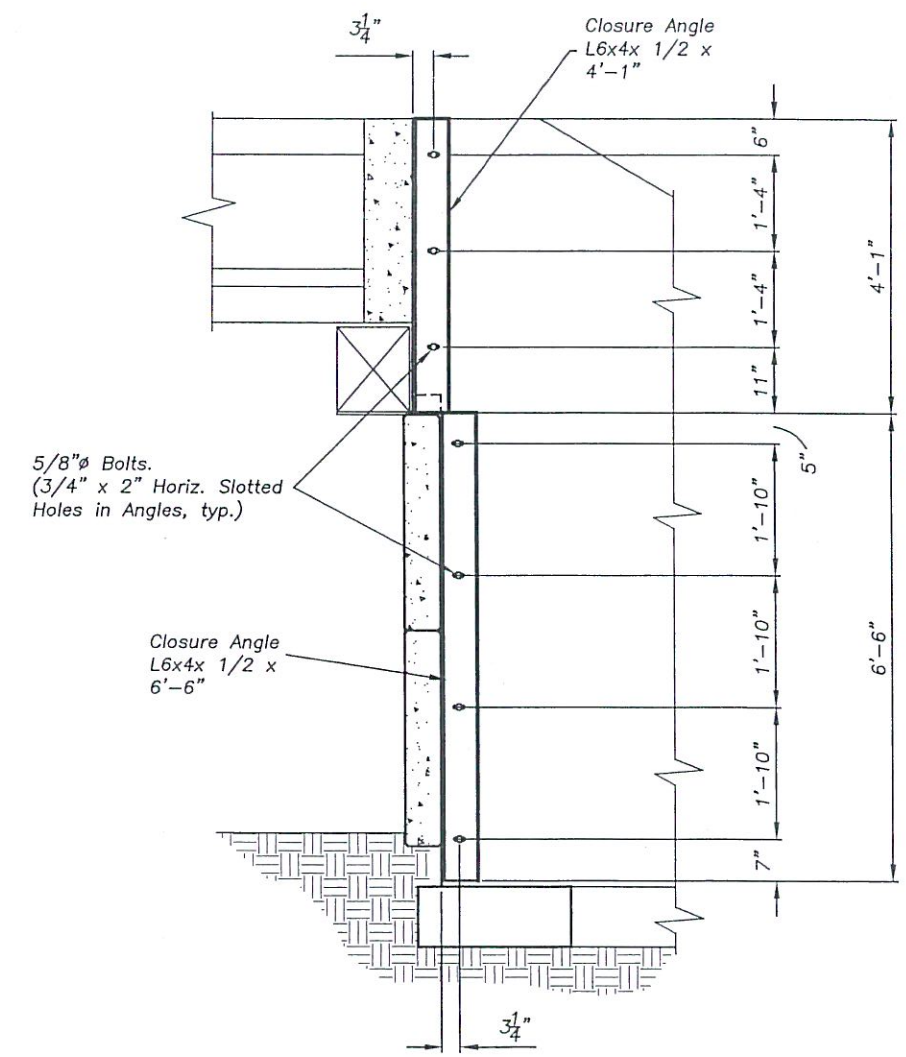

1/6 **SECTION**
Scale: 3/8" = 1'-0"

BY	DATE	REVISION DESCRIPTION

DESIGN MTJ PROJ. NO. 5074
DRAWN MTJ DATE 2/06
CHECKED

DJ&A, P.C.
CONSULTING ENGINEERS & LAND SURVEYORS
3203 Russell Street, Missoula, Montana 59801-6591
Phone 406/721-4320 Fax 406/549-6371

DNRC
STILLWATER STATE FOREST
7.5 MILE BRIDGE

WINGWALL DETAILS

SHEET 6 OF 12

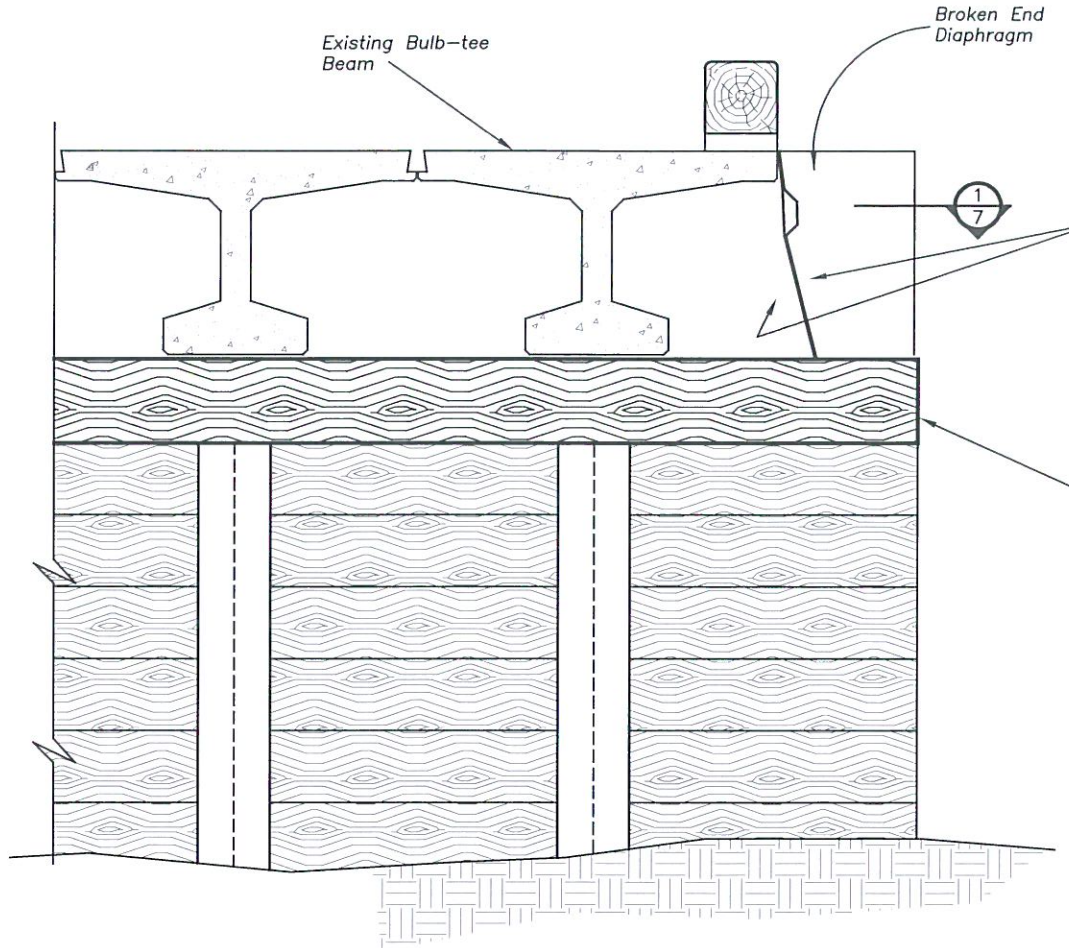

ELEVATION - ABUTMENT 1

Not to Scale

DRY-PACK MORTAR REPAIR

Mix Dry–pack mortar, consisting of one part portland cement to 2–1/2 parts fine aggregate sand passing a No. 16 mesh sieve, using only enough water as required for handling and placing. Consistency should be such that hand pressing into a firm ball shows no evidence of cracking or excessive surface moisture.

Thoroughly clean the contact surfaces. Dampen with water and brush–coat the area with bonding agent. Place patching mortar before bonding agent has dried.

Compact mortar in place and strike–off slightly higher than surrounding surface.

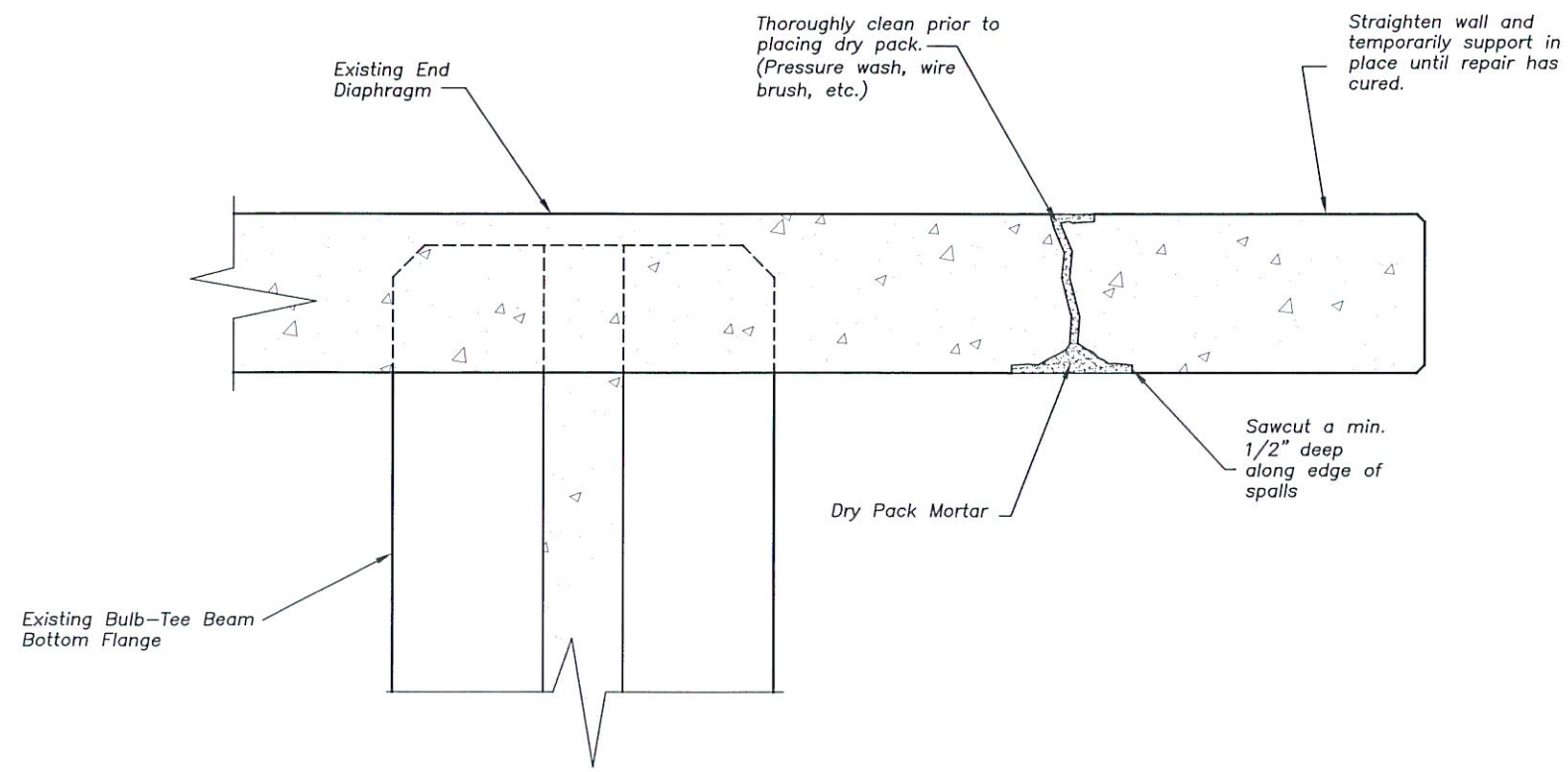

1/7 SECTION

BY	DATE	REVISION DESCRIPTION

DESIGN MTJ PROJ. NO. 5074
DRAWN MTJ DATE 2/06
CHECKED

DJ&A, P.C.
CONSULTING ENGINEERS & LAND SURVEYORS
3203 Russell Street, Missoula, Montana 59801-8591
Phone 406/721-4320 Fax 406/543-6371

DNRC
STILLWATER STATE FOREST
7.5 MILE BRIDGE

EXISTING END DIAPHRAGM REPAIR DETAILS

SHEET 7 OF 12

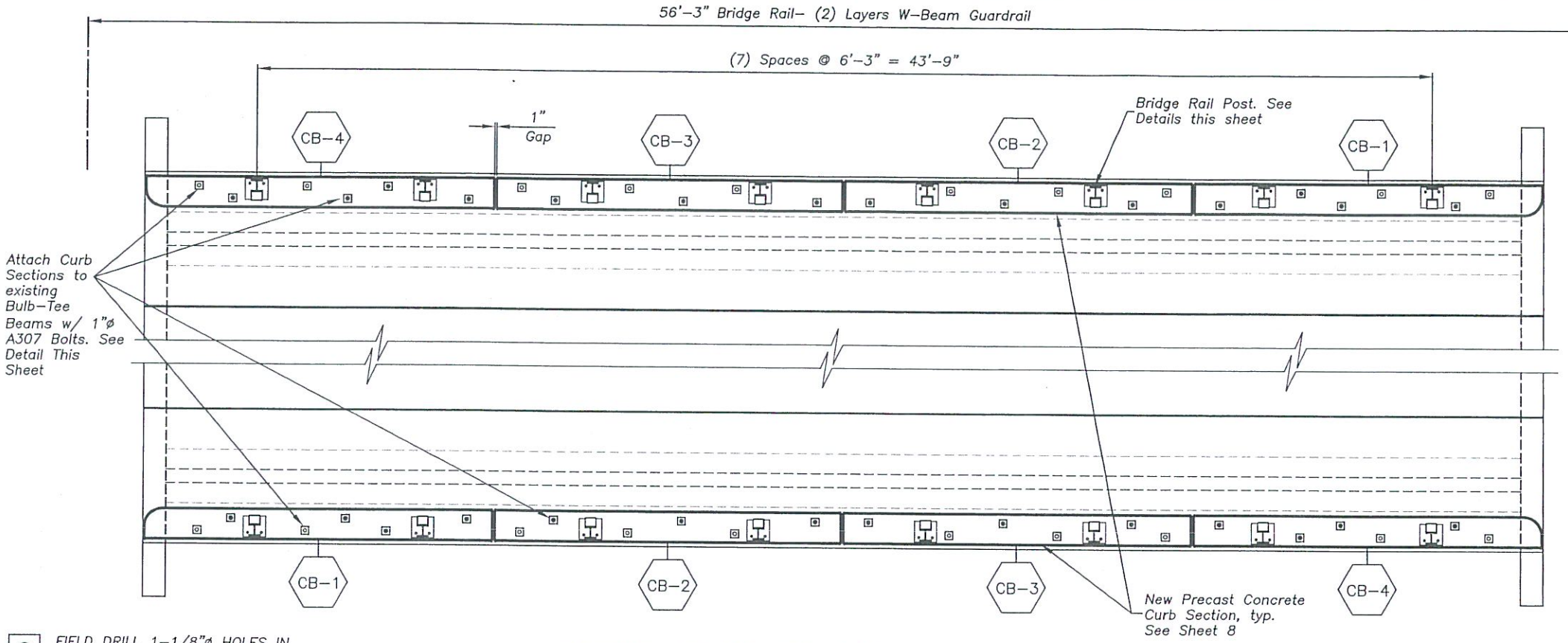

FIELD DRILL 1-1/8"ø HOLES IN BULB-TEE FLANGE

USE EXISTING HOLES IN BULB-TEE FLANGE

CURB/RAIL PLAN

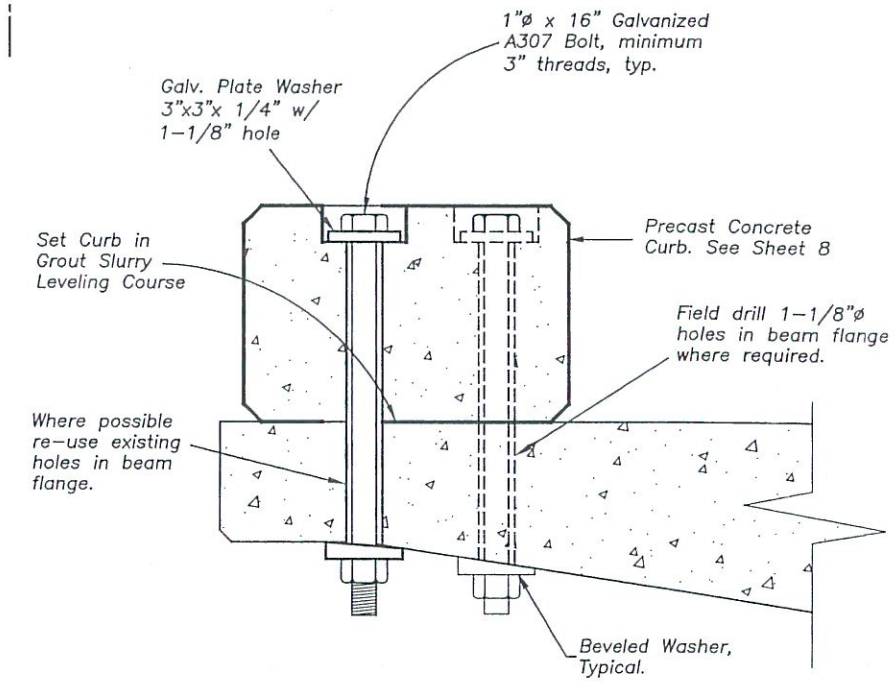

CURB CONNECTION DETAIL

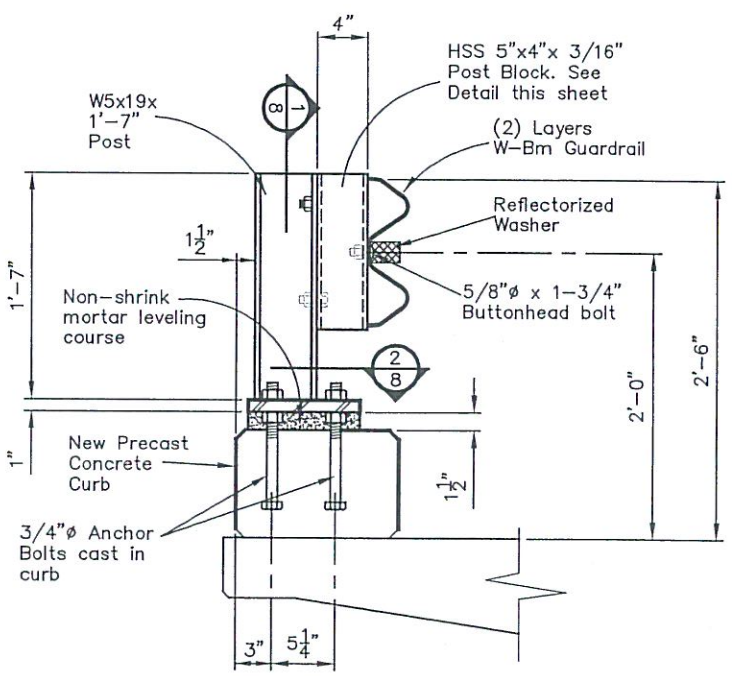

BRIDGE RAIL DETAIL

Scale: 3/4" = 1'-0"

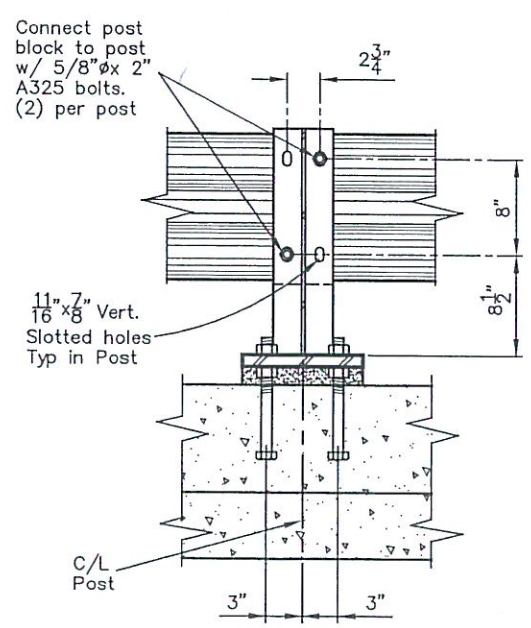

1/8 SECTION

Scale: 3/4" = 1'-0"

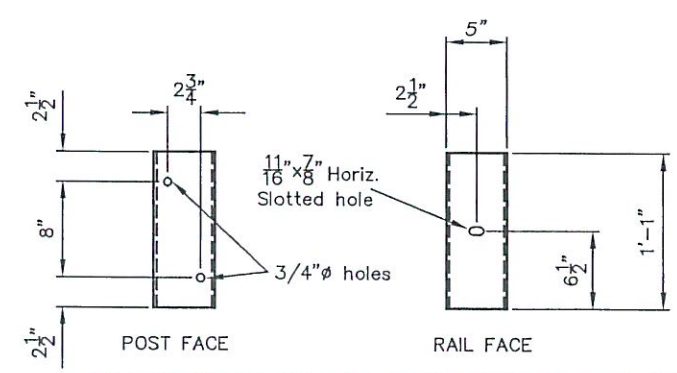

BRIDGE RAIL POST BLOCK

Scale: 3/4" = 1'-0"

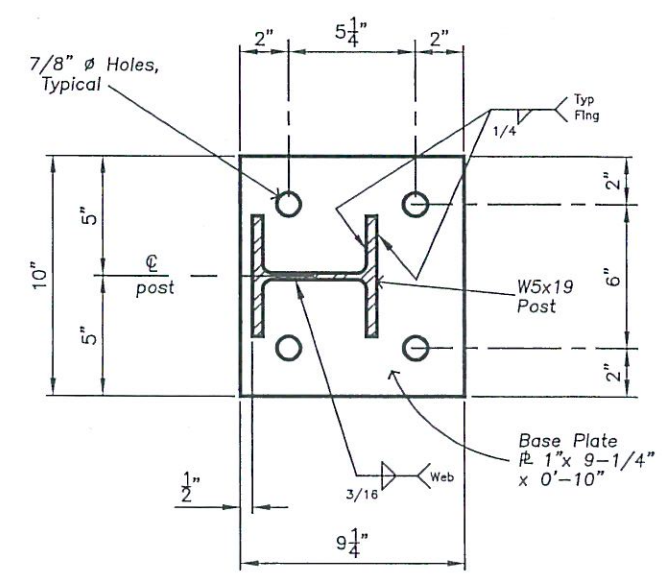

2/8 SECTION

Scale: 1 1/2" = 1'-0"

BY	DATE	REVISION DESCRIPTION

DESIGN MTJ PROJ. NO. 5074
DRAWN MTJ DATE 2/06
CHECKED

DJ&A, P.C.
CONSULTING ENGINEERS & LAND SURVEYORS
3203 Russell Street, Missoula, Montana 59801-8581
Phone 406/721-4320 Fax 406/549-6371

DNRC
STILLWATER STATE FOREST
7.5 MILE BRIDGE

BRIDGE RAIL AND CURB LAYOUT AND INSTALLATION DETAILS

SHEET 8 OF 12

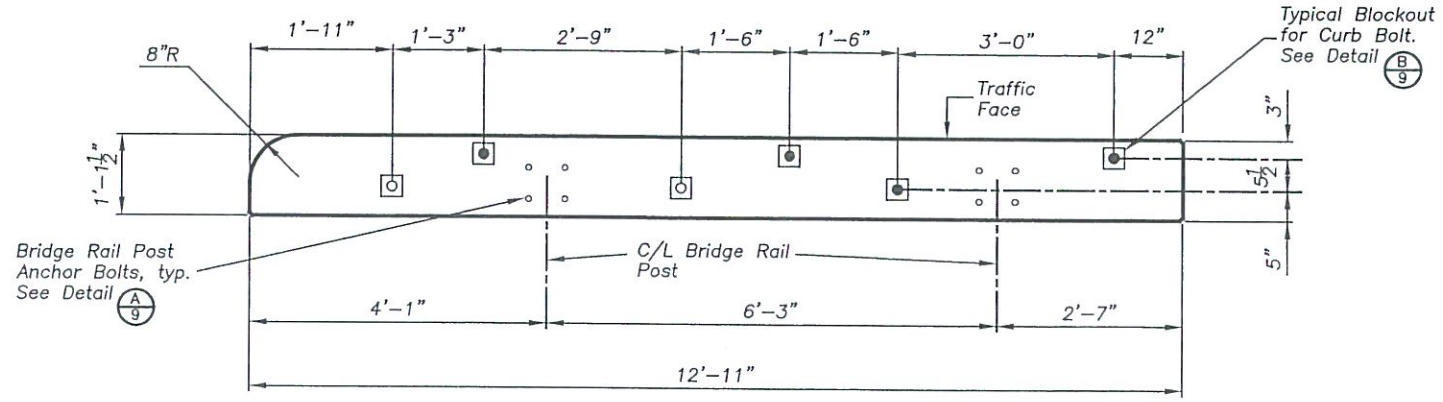

CURB CB-1

(2) Required

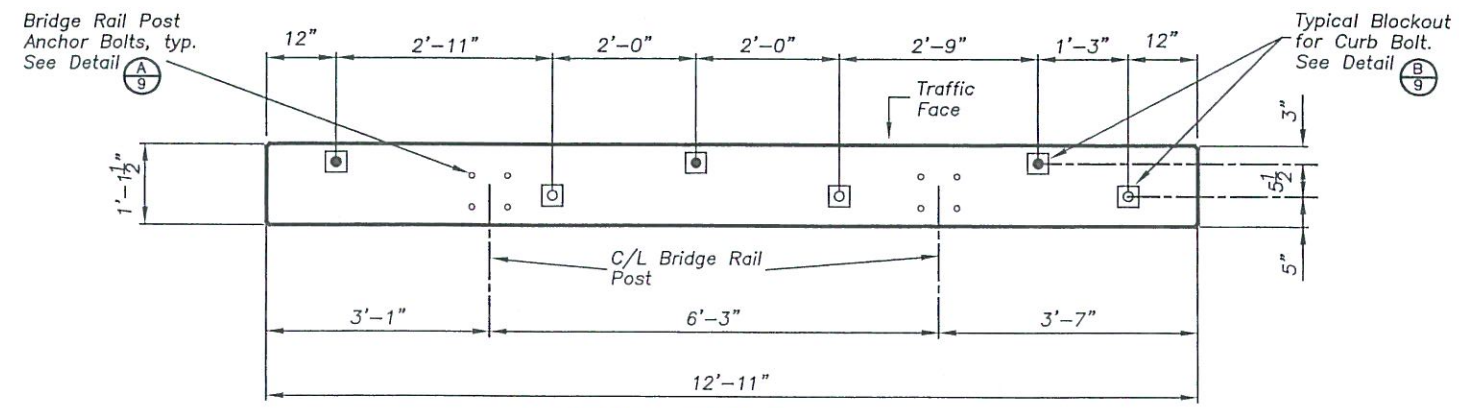

CURB CB-3

(2) Required

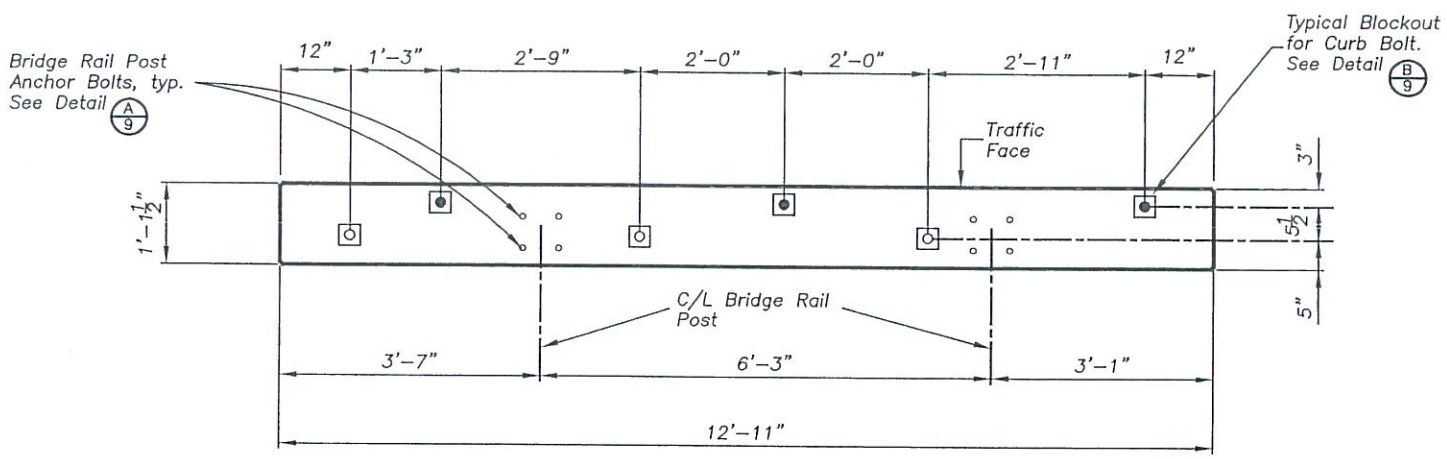

CURB CB-2

(2) Required

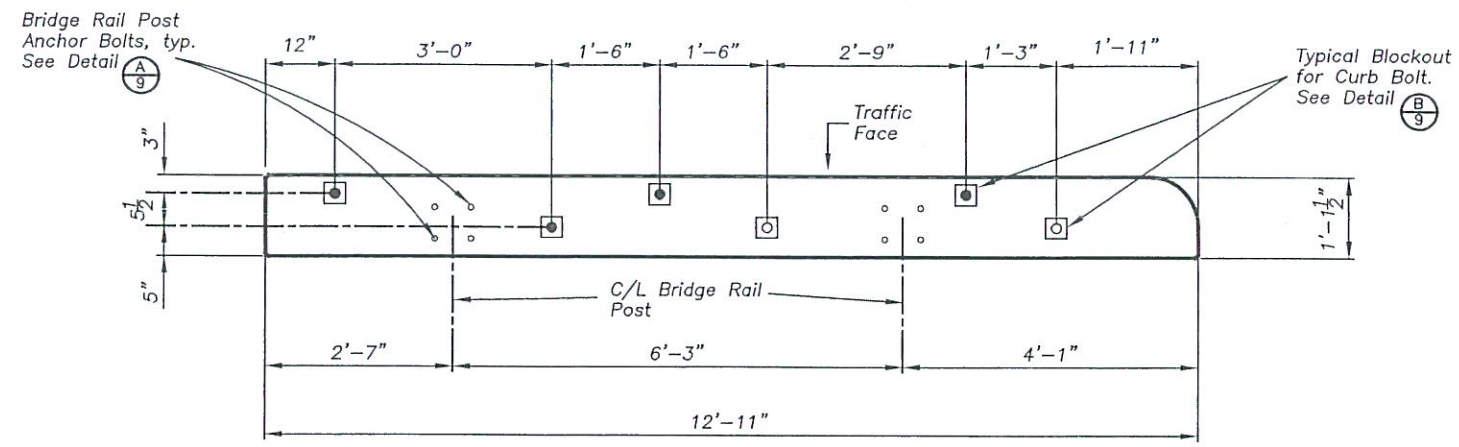

CURB CB-4

(2) Required

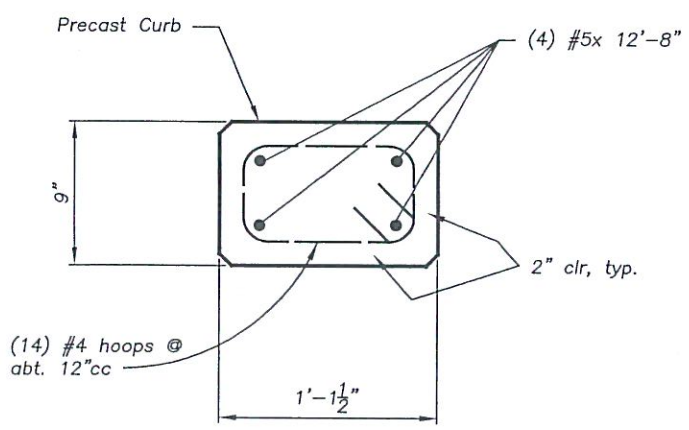

TYPICAL SECTION

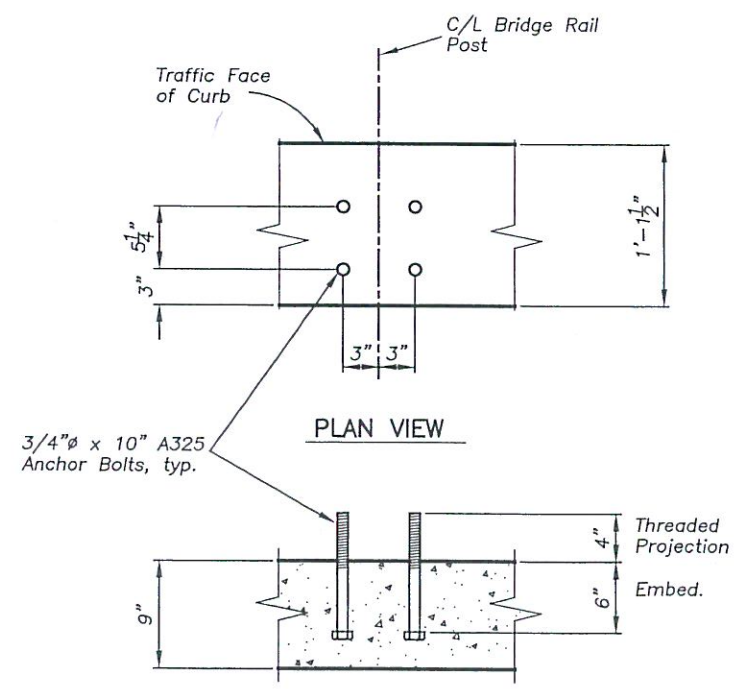

A/9 DETAIL

Scale: 3/4" = 1'-0"

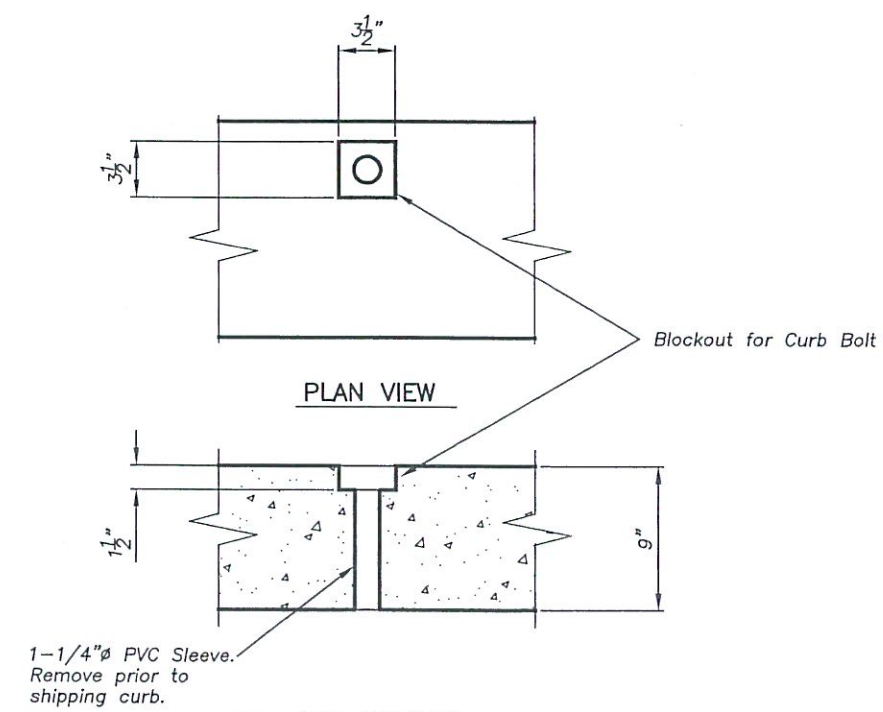

B/9 DETAIL

Scale: 3/4" = 1'-0"

BY	DATE	REVISION DESCRIPTION

DESIGN MTJ PROJ. NO. 5074
DRAWN MTJ DATE 2/06
CHECKED

D&A, P.C.
CONSULTING ENGINEERS & LAND SURVEYORS
3203 Russell Street, Missoula, Montana 59801-6591
Phone 406/721-4320 Fax 406/549-6311

DNRC
STILLWATER STATE FOREST
7.5 MILE BRIDGE

PRECAST CONCRETE CURB
PIECE DRAWINGS AND DETAILS

SHEET 9 OF 12

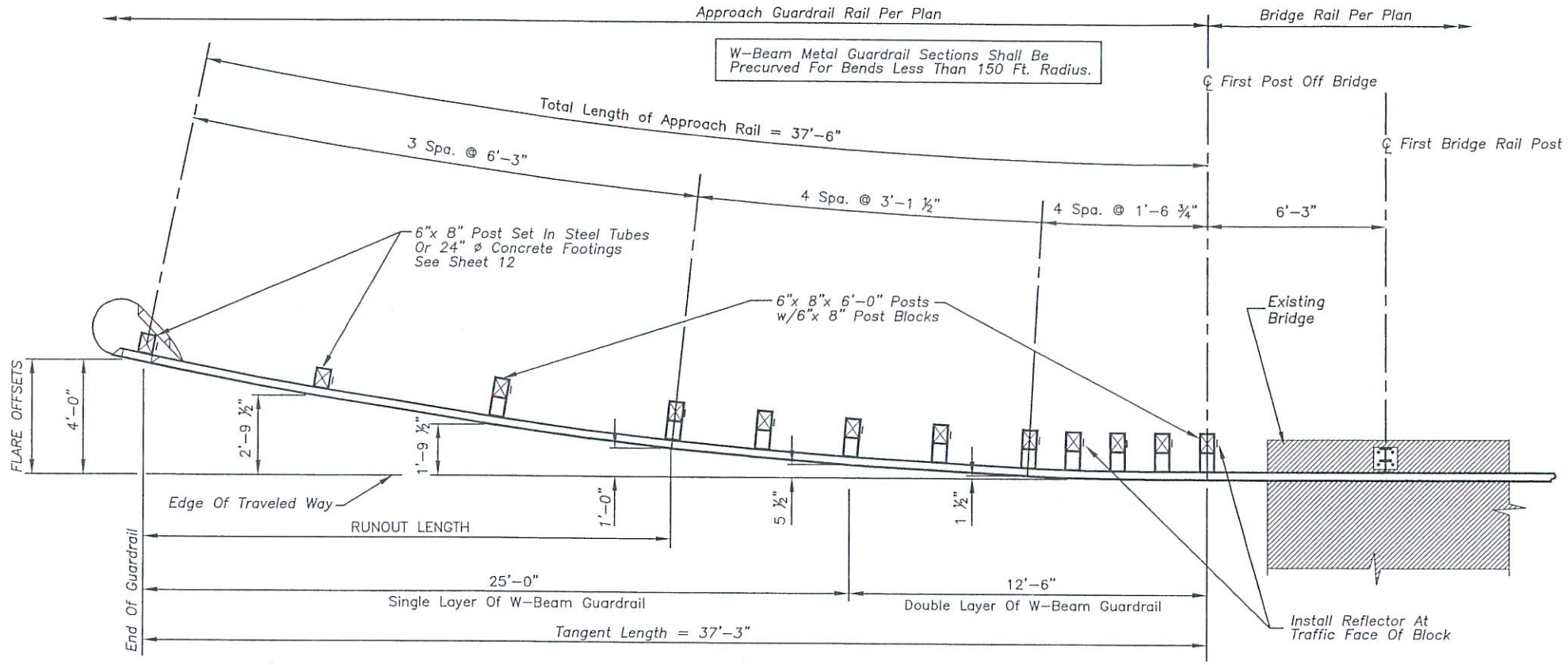

APPROACH RAIL PLAN- 4' OFFSET

Scale: 3/16" = 1'-0"

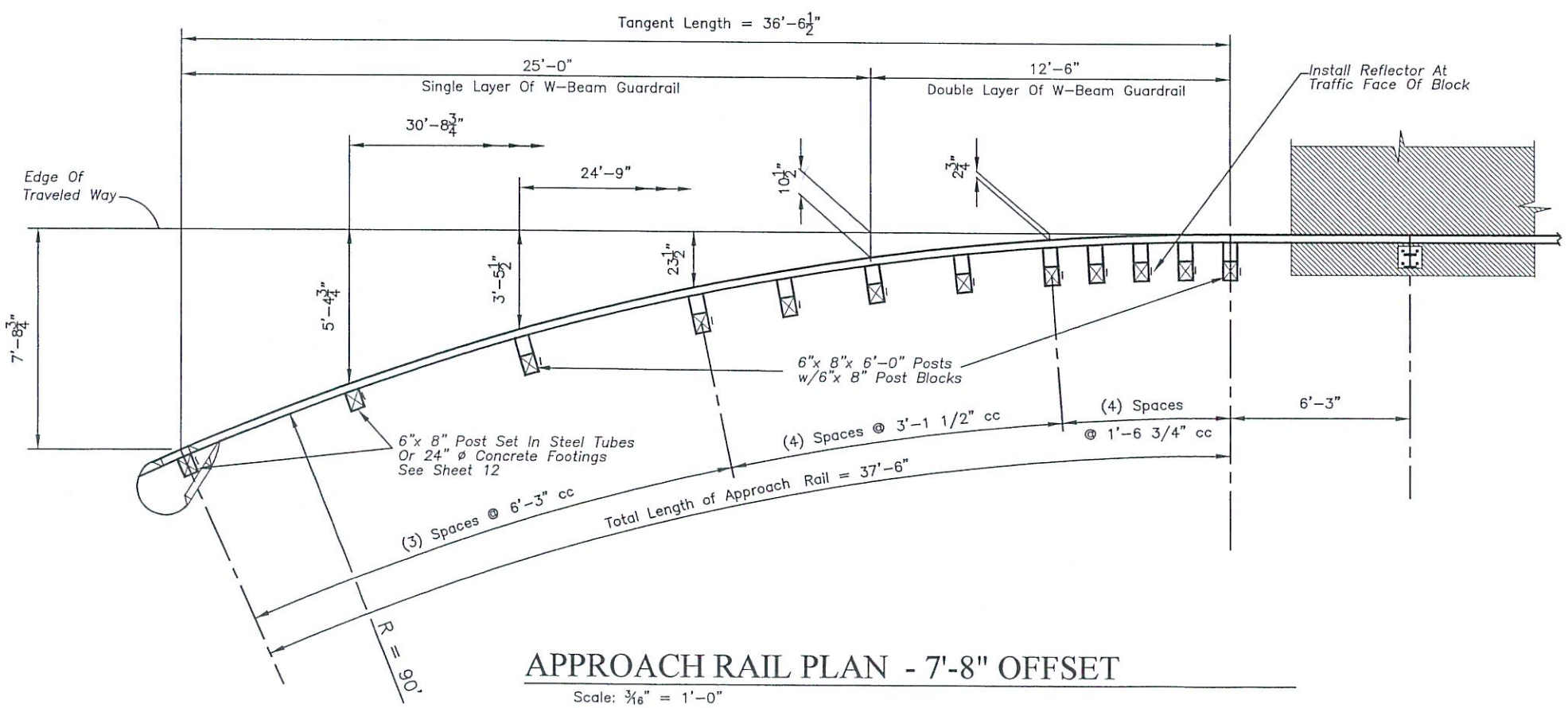

APPROACH RAIL PLAN - 7'-8" OFFSET

Scale: 3/16" = 1'-0"

GENERAL NOTES:

SPECIFICATIONS: Materials and construction of this structure shall be in accordance with the August, 1996 USDA Forest Service Standard Specifications.

MATERIALS: Steel shapes, plates and bars shall be structural steel conforming to AASHTO M270, Grade 36, except structural tubing shall conform to ASTM A500 Grade B, or ASTM A501. If not covered by 1 inch or more of concrete, steel shape, plates and bars shall be galvanized in accordance with AASHTO M111 (ASTM A123). W-Beam guardrail and associated hardware shall meet AASHTO M180, Class A, and shall be Type 1 (Galvanized) or Type 4 (A588) per GENERAL LAYOUT Sheet. W-Beam terminal piece shall be Class B. All bolts, nuts and washers, except buttonhead bolts, shall conform to AASHTO M164 (ASTM A325 or A449) and shall be galvanized in accordance with AASHTO M232 (ASTM A153). Cable Assembly shall be galvanized and conform to AASHTO M30 (ASTM A741).

Timbers shall be Western Wood (No. 1 Grade) conforming to the current WWPA Or WCLIB grading rules for Western Lumber.

Concrete for end anchors shall have a minimum 28 day compressive strength of 3000 psi. Welded Wire Fabric shall conform to AASHTO M55 (ASTM A185).

FABRICATION: All lumber fabrication shall be completed before treatment. Structural steel shall be shop fabricated. Welding shall conform to AWS structural welding code D1.1 and shall be by a certified welder. All steel shall be fabricated before being galvanized, except minor shop cutting. Drilling and welding is permitted on galvanized metal, provided these areas are cleaned and repaired with 2 coats of zinc dust-zinc oxide paint meeting federal specification TT-P-641 or military specification MIL-P-21035. All rail splices shall occur at posts. Shop bend curved rail sections.

TREATMENT: After fabrication, all timber shall be incised and then pressure treated in accordance with AWPA C14 for Post, Guardrail, And Spacer Blocks Usage. Treatment shall comply with the requirements of the current edition of WWPA's "Best Management Practices for the use of Treated Wood in Aquatic Environments" and the supplier shall furnish, upon delivery of materials, a certificate of compliance.

ERECTION: No field cutting or welding is permitted on galvanized metal unless approved by the Contracting Officer. All rail posts shall be set vertically and the railing erected parallel to grade. The Contractor shall furnish galvanized steel shim plates as required to align railing. Approach guardrail post holes shall be a minimum of 18" in diameter, unless augered or driven. Bottom of excavated holes shall be thoroughly compacted and backfill shall be thoroughly tamped in 4 inch layers. Fill all unused holes in W-Beam with standard buttonhead bolts and nuts. After erection is complete, burr threads of all rods and bolts to prevent backing off of nuts. All damaged galvanized surfaces shall be repaired with 2 coats of zinc paint as specified in the fabrication note above. There shall be no more than one rail splice per post when double-layer W-Beam guardrail elements are specified.

BY	DATE	REVISION DESCRIPTION

DESIGN ____ PROJ. NO. ____
DRAWN ____ DATE ____
CHECKED ____ SURVEYED ____

D&A, P.C.
CONSULTING ENGINEERS & LAND SURVEYORS
3203 Russell Street, Missoula, Montana 59801-5691
Phone 406/721-4320 Fax 406/549-5371

DNRC
STILLWATER STATE FOREST
7.5 MILE BRIDGE

APPROACH GUARDRAIL PLAN & GENERAL LAYOUT

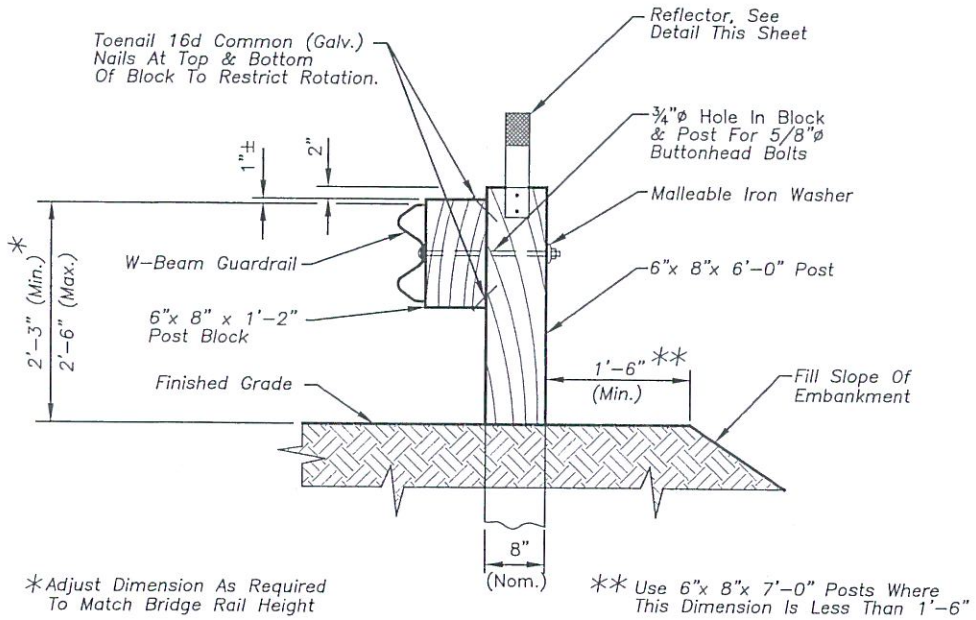

TYPICAL APPROACH GUARDRAIL CROSS SECTION

Scale: ½" = 1'-0"

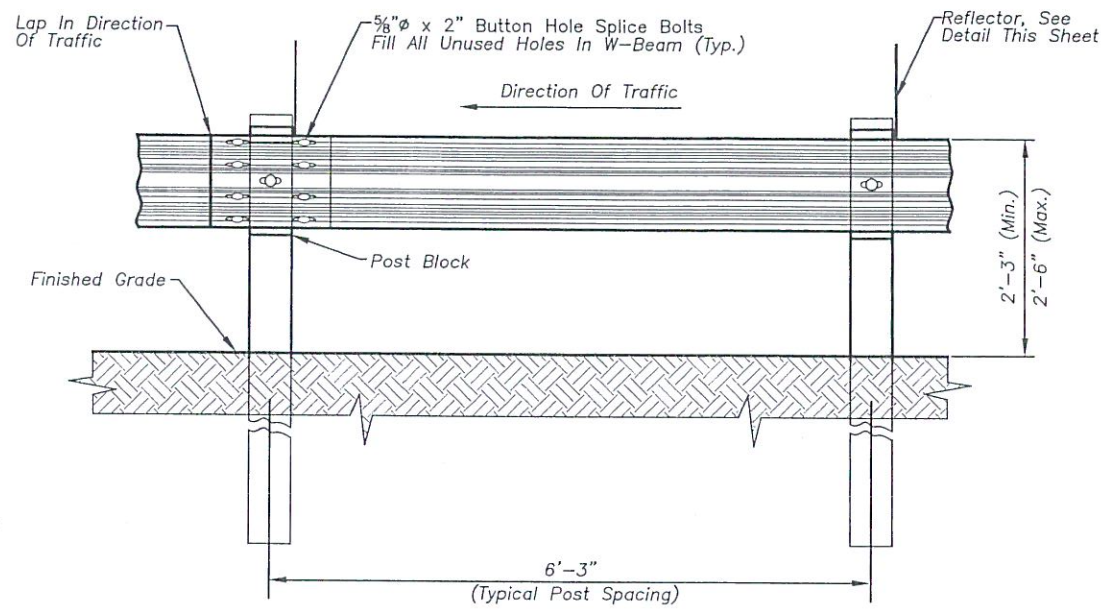

GUARDRAIL SPLICE DETAIL

Scale: ½" = 1'-0"

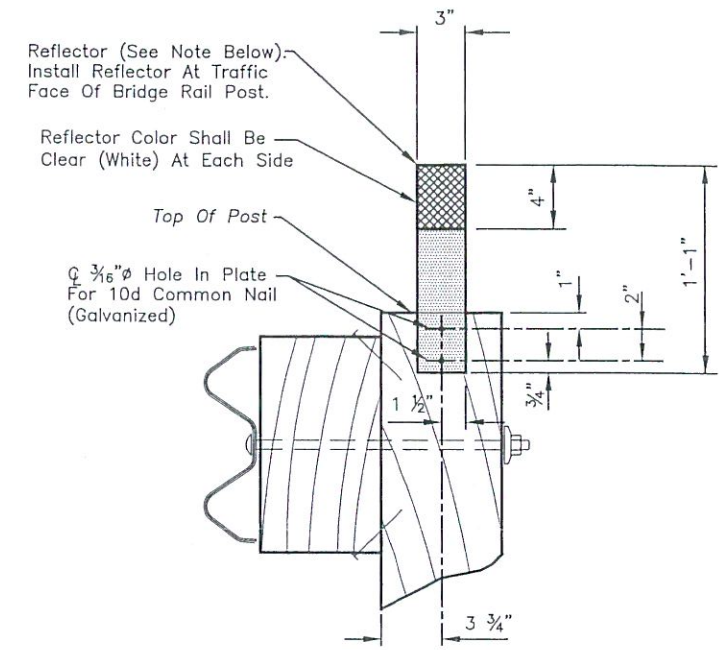

GUARDRAIL REFLECTORS

Scale: 1" = 1'-0"

NOTE:

Reflectors Manufactured By Roadside Safety Devices In Gilford, Montana, Or By Carsonite Will Meet The Requirements Detailed Above. Reflectors Made By Other Manufacturers May Be Submitted To The C.O. For Review.

BY	DATE	REVISION DESCRIPTION

DESIGN ____ PROJ. NO. ____
DRAWN ____ DATE ____
CHECKED ____ SURVEYED ____

DJ&A, P.C.
CONSULTING ENGINEERS & LAND SURVEYORS
3203 Russell Street, Missoula, Montana 59801-6501
Phone 406/721-4320 Fax 406/549-6371

DNRC
STILLWATER STATE FOREST
7.5 MILE BRIDGE

APPROACH GUARDRAIL INSTALLATION DETAILS

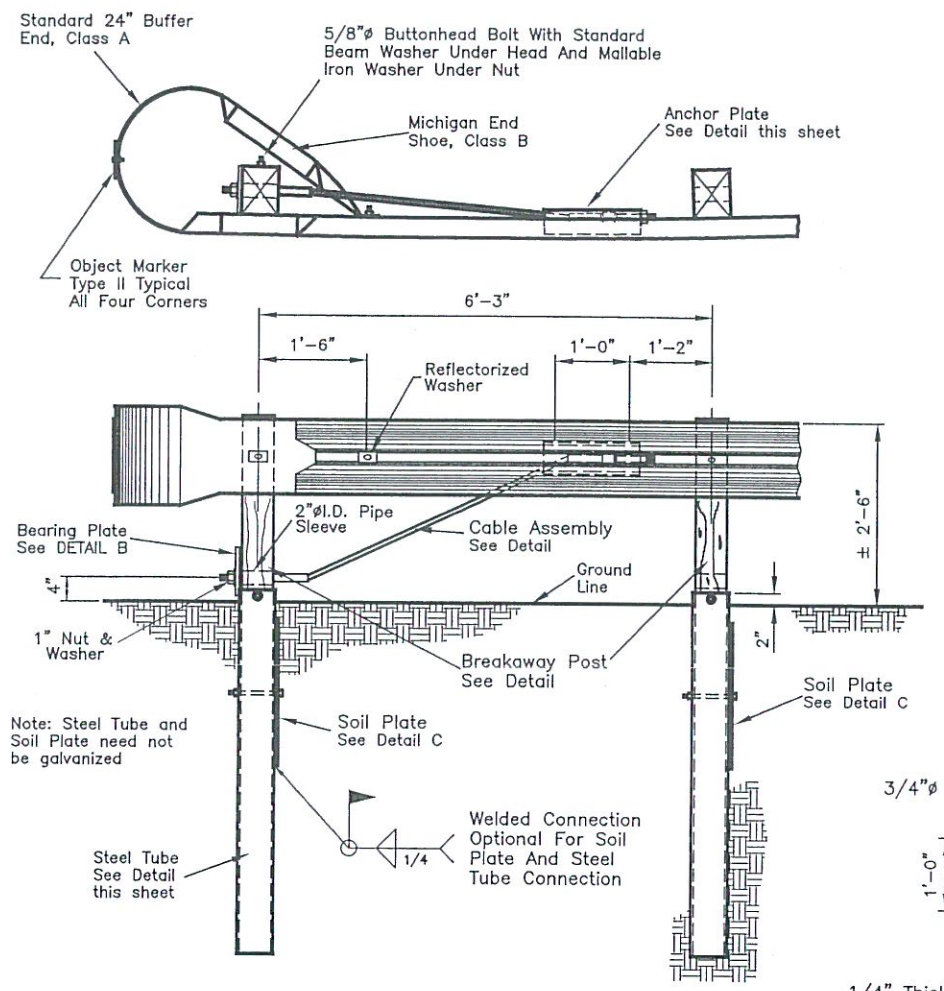

END ANCHOR DETAIL (STEEL PLATES)

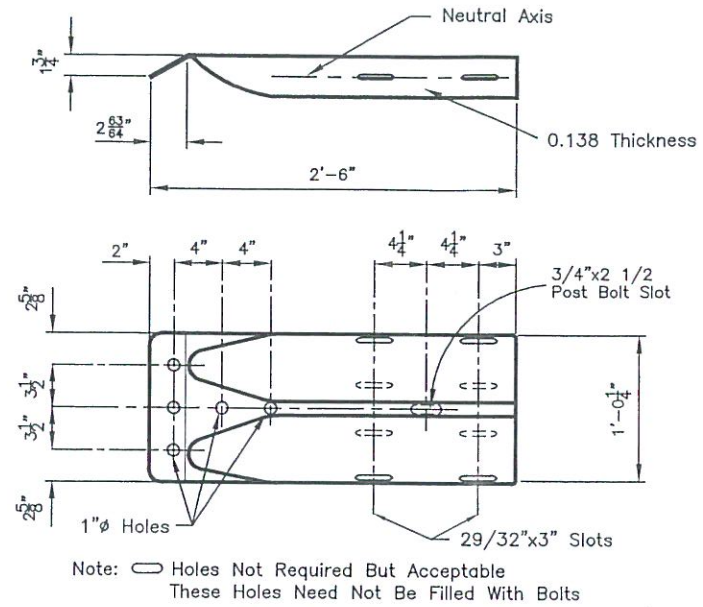

MICHIGAN END SHOE DETAIL

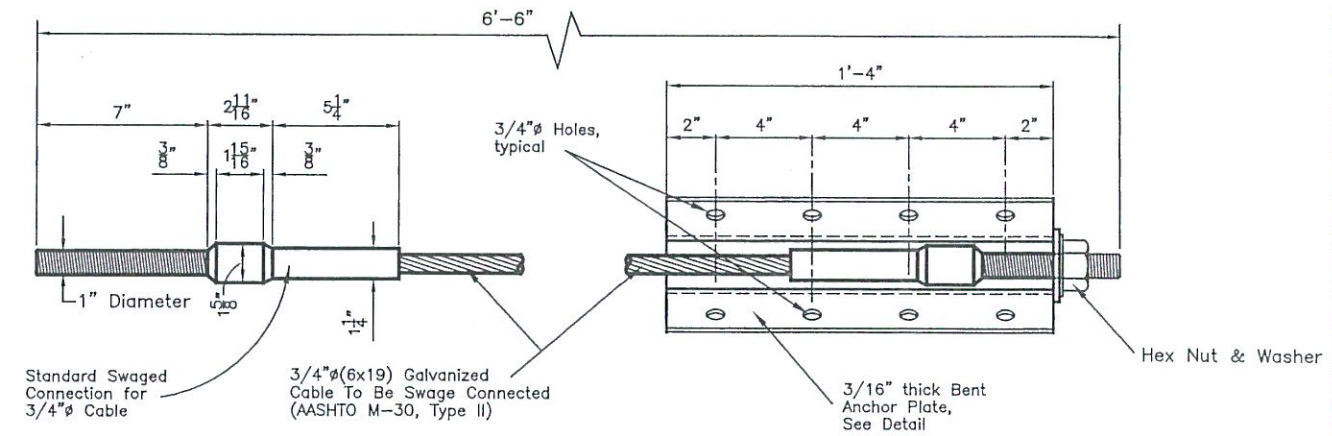

CABLE ASSEMBLY DETAILS

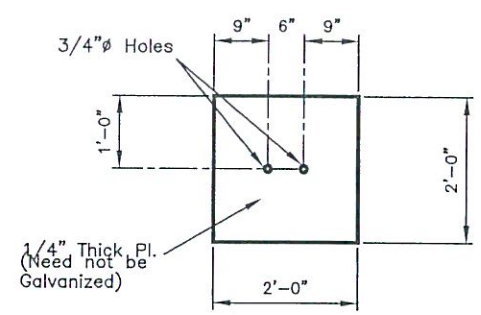

DETAIL C SOIL PLATE

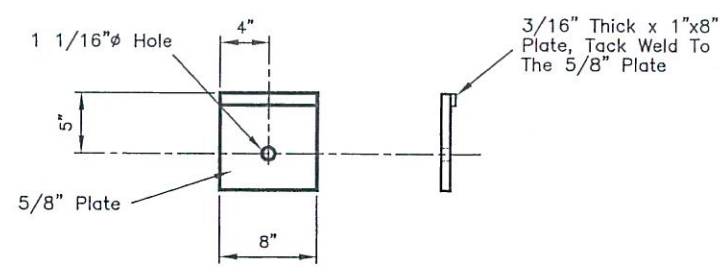

DETAIL B BEARING PLATE

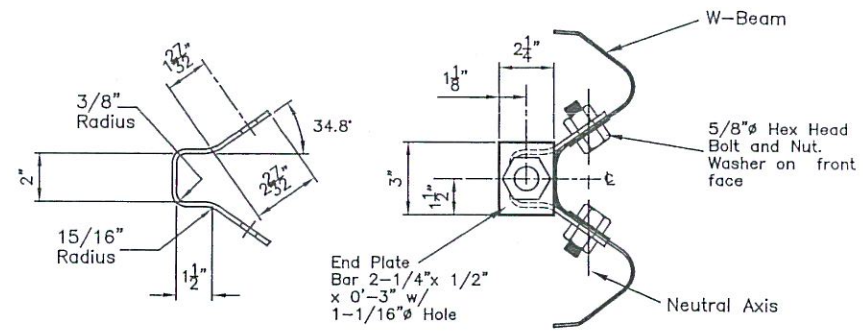

ANCHOR PLATE DETAILS

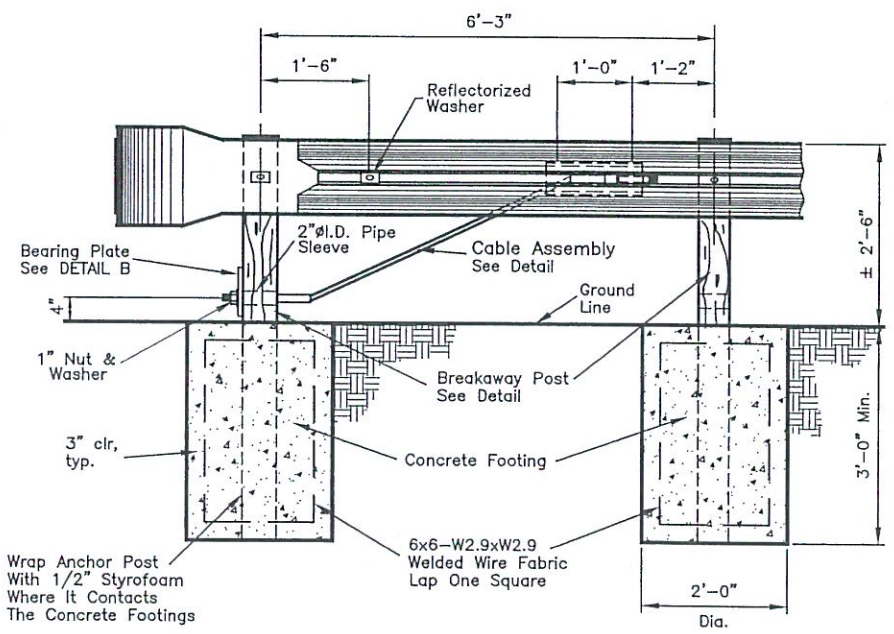

ALTERNATE END ANCHOR DETAIL (CONCRETE FOOTINGS)

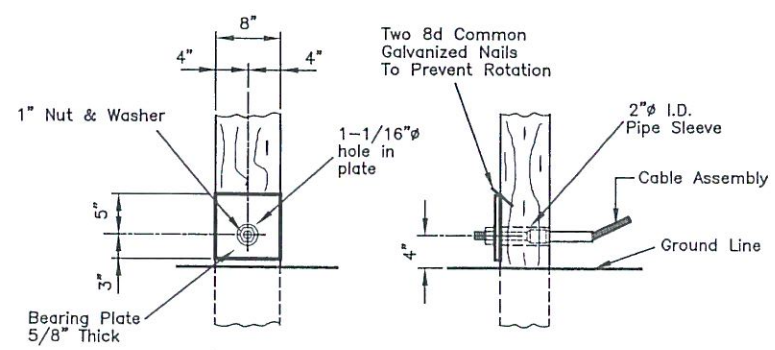

DETAIL A

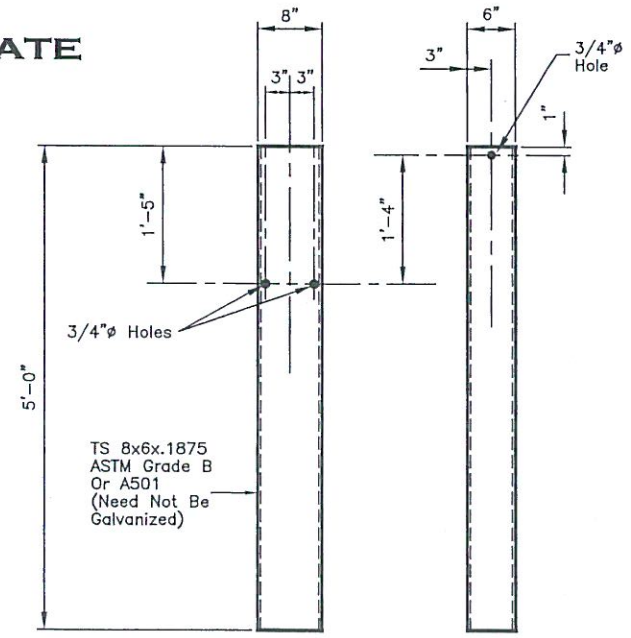

STEEL TUBE DETAIL

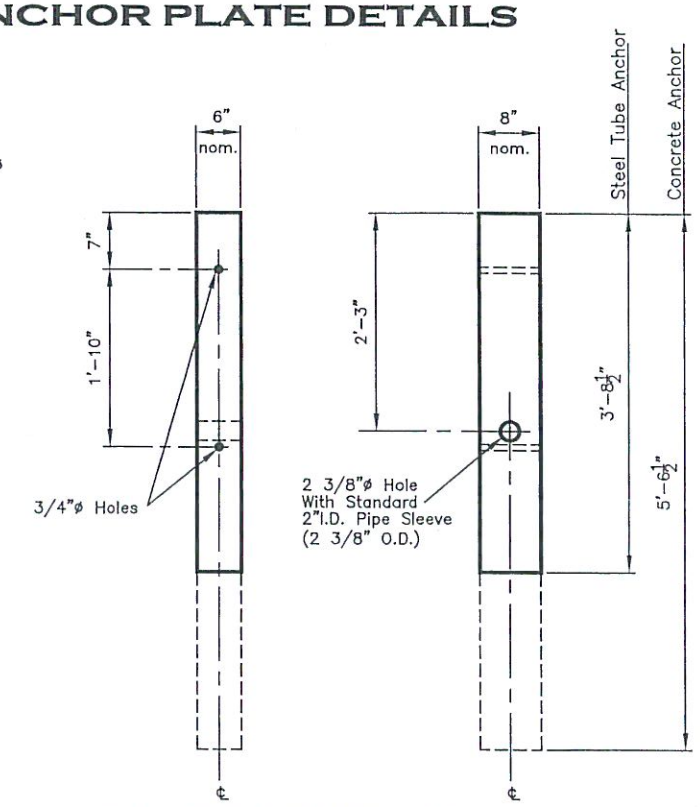

WOOD BREAKAWAY POST

BY	DATE	REVISION DESCRIPTION

DESIGN ____ PROJ. NO. ____
DRAWN ____ DATE ____
CHECKED ____

D&A, P.C.
CONSULTING ENGINEERS & LAND SURVEYORS
2335 Russell Street, Missoula, Montana 59801-6591
Phone 406/721-4320 Fax 406/549-6371

DNRC
STILLWATER STATE FOREST
7.5 MILE BRIDGE

APPROACH GUARDRAIL
END ANCHORAGE DETAILS

SHEET 12 OF 12

ROADENG Plan		
C:\Program Files\Softree\RoadEng\Data\7 mile bridge\7 mile	Scale 1:800	P. 1
		08/04/02

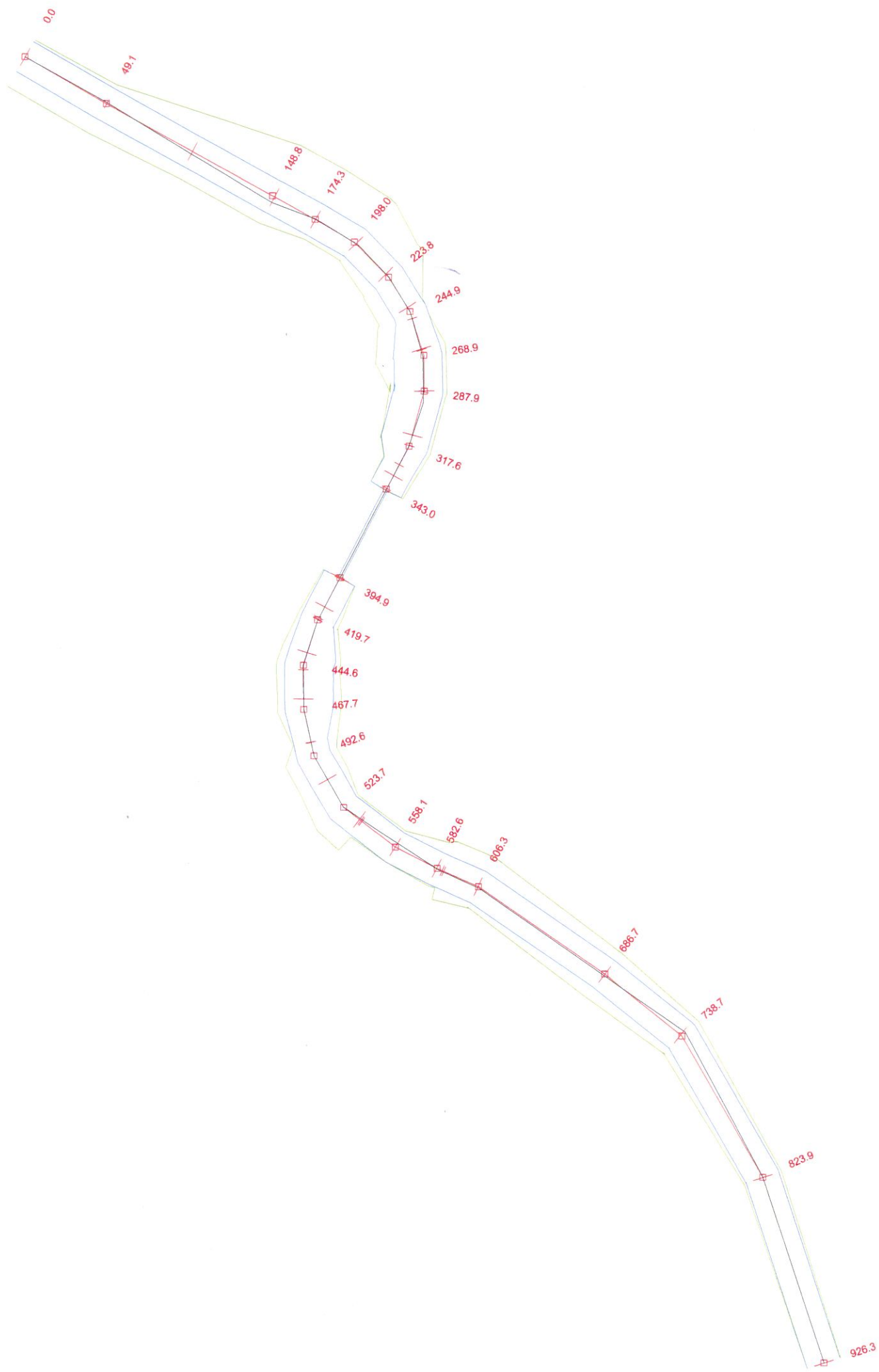

ROADENG Section

C:\Program Files\Softree\RoadEng\Data\7 mile bridge\7 mile

Scale 1:161

P. 1

08/04/02

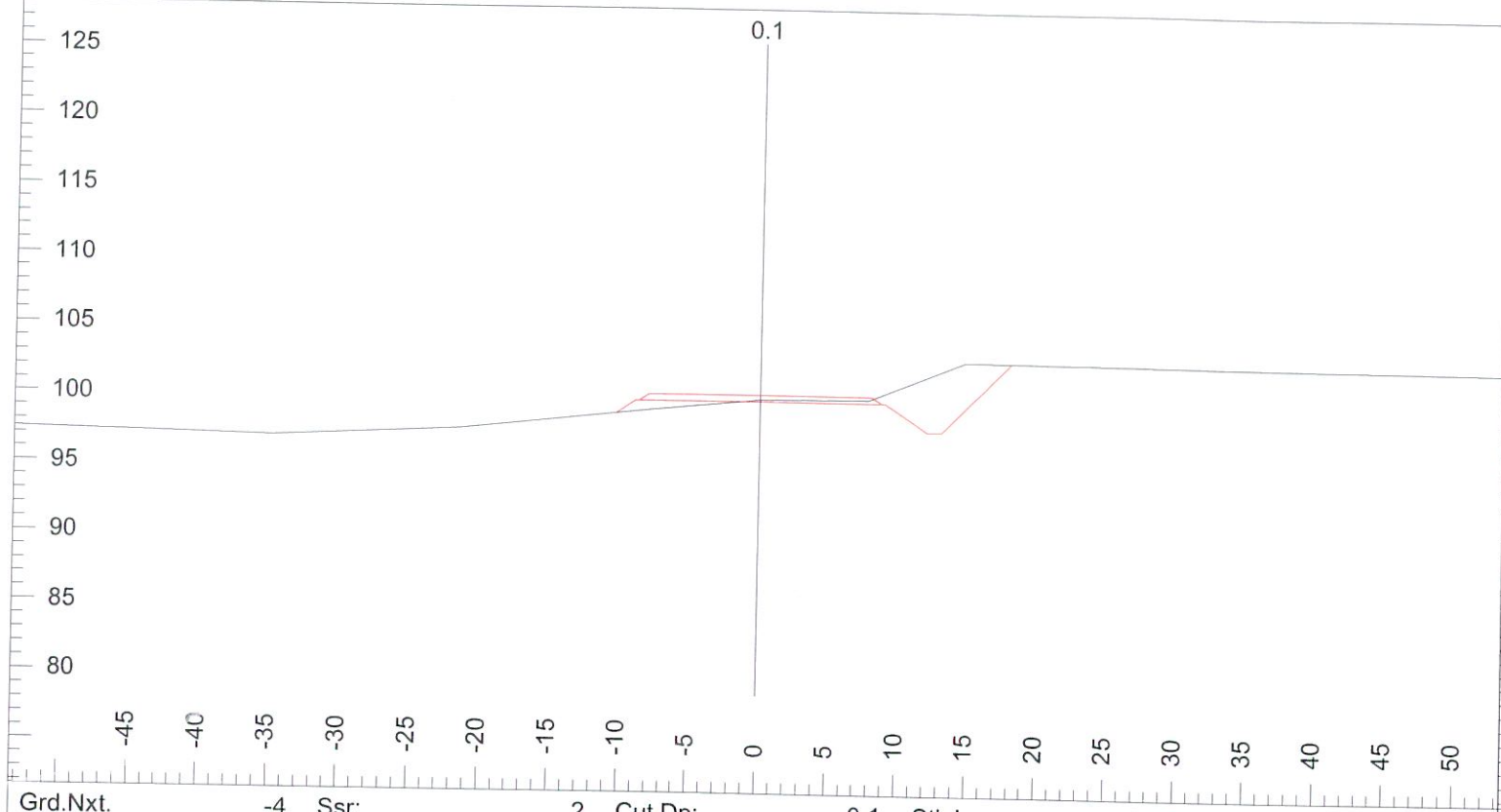

Grd.Nxt.	-4	Ssr:	2	Cut Dp:	0.1	Stk L:	10.5
Grd.Lst:	-4	F Slope L:	-67	P-Clr L:	20.1	Stk R:	18.2
Ssl:	-9	F Slope R:	100	P-Clr R:	23.3		

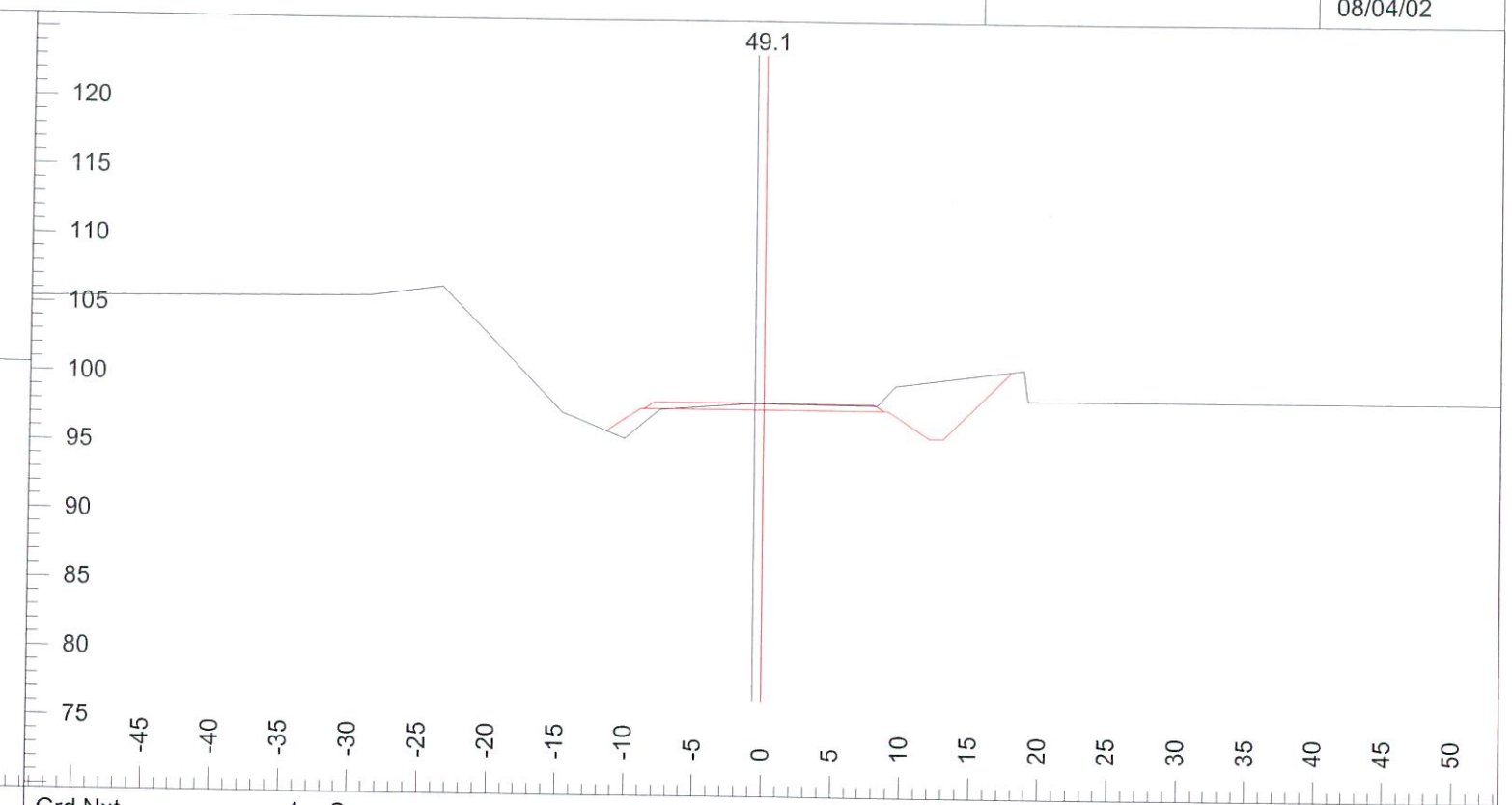

Grd.Nxt.	-4	Ssr:	-1	Cut Dp:	0.4	Stk L:	11.7
Grd.Lst:	-4	F Slope L:	-67	P-Clr L:	19.7	Stk R:	18.0
Ssl:	1	F Slope R:	100	P-Clr R:	23.7		

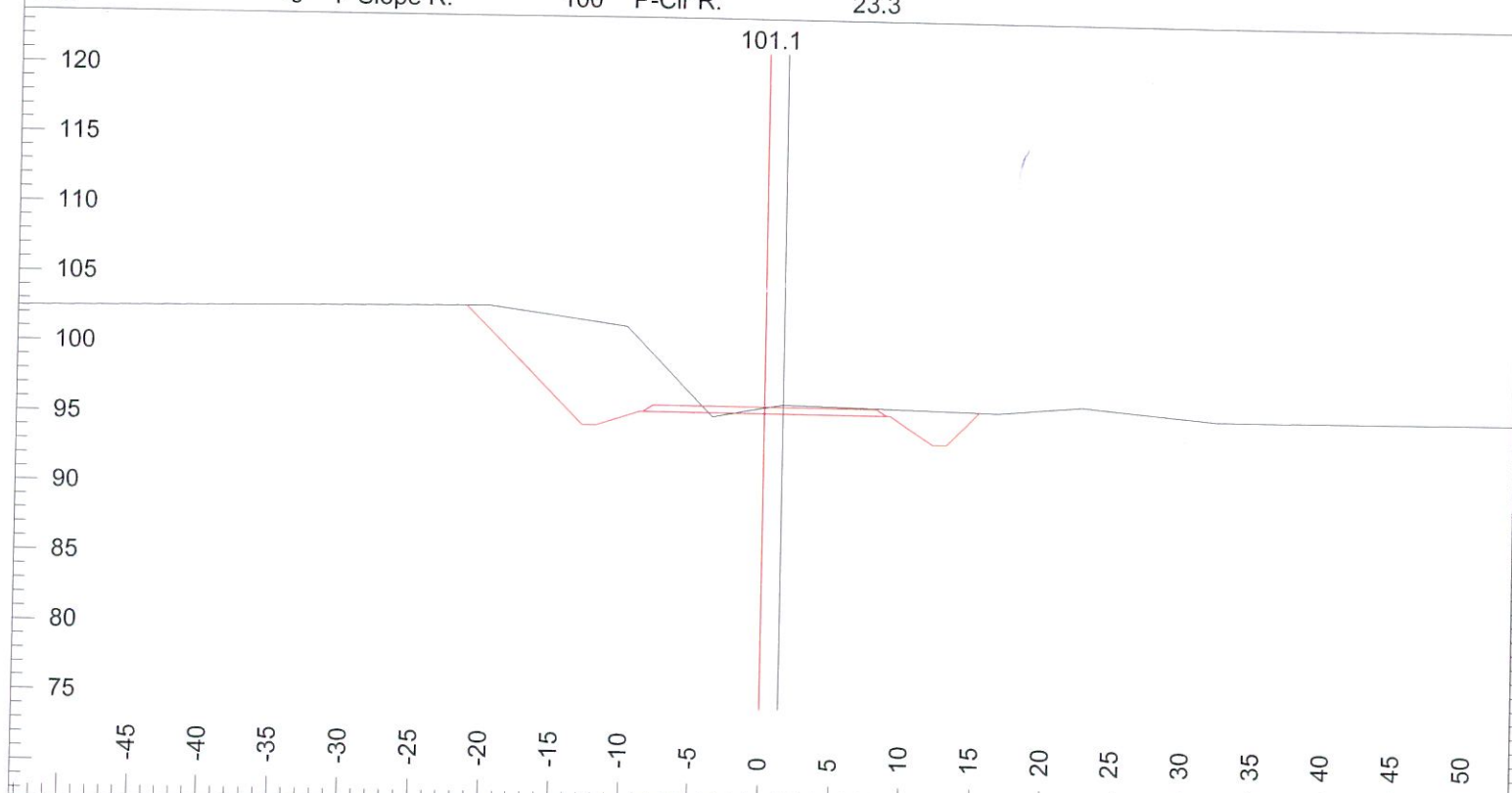

Grd.Nxt.	-4	Ssr:	17	Cut Dp:	0.4	Stk L:	22.5
Grd.Lst:	-4	F Slope L:	100	P-Clr L:	28.9	Stk R:	15.3
Ssl:	-17	F Slope R:	100	P-Clr R:	19.0		

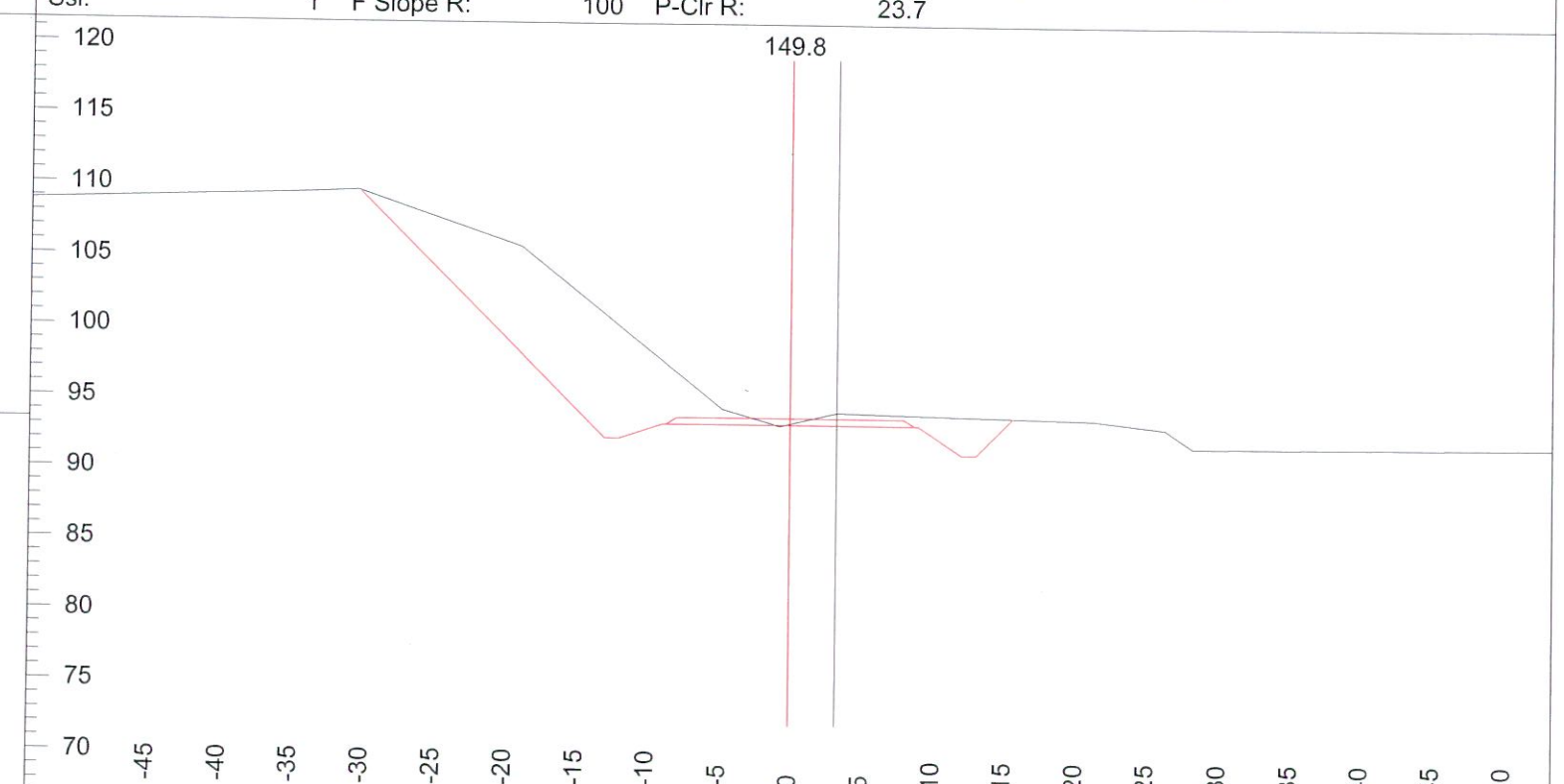

Grd.Nxt.	-4	Ssr:	23	Cut Dp:	0.1	Stk L:	34.3
Grd.Lst:	-4	F Slope L:	100	P-Clr L:	42.3	Stk R:	15.6
Ssl:	-23	F Slope R:	100	P-Clr R:	17.3		

ROADENG Section

C:\Program Files\Softree\RoadEng\Data\7 mile bridge\7 mile

Scale 1:161

P. 2

08/04/02

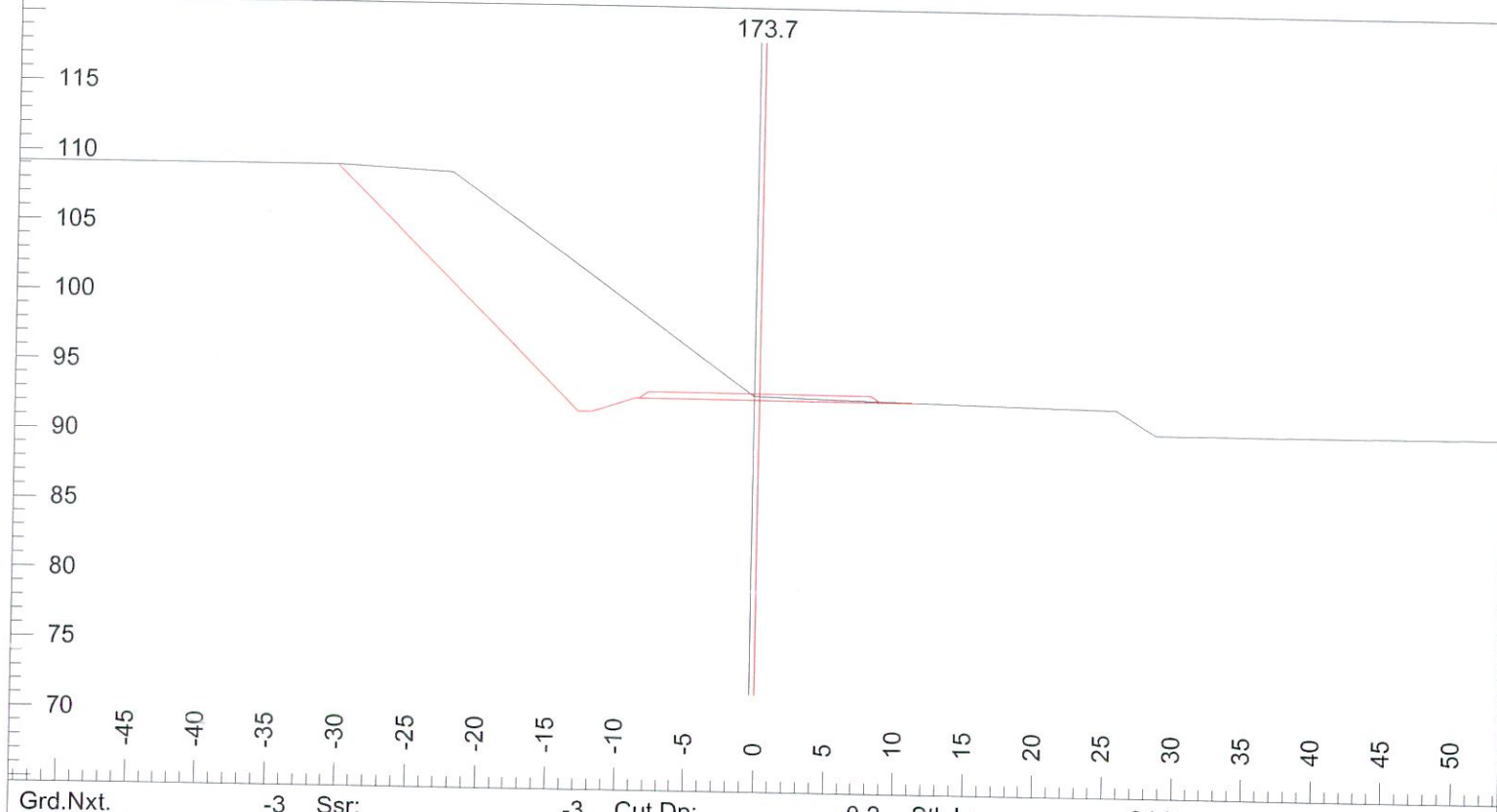

Grd.Nxt.	-3	Ssr:	-3	Cut Dp:	0.2	Stk L:	34.5
Grd.Lst:	-3	F Slope L:	100	P-Clr L:	39.8	Stk R:	11.4
Ssl:	3	F Slope R:	0	P-Clr R:	20.4		

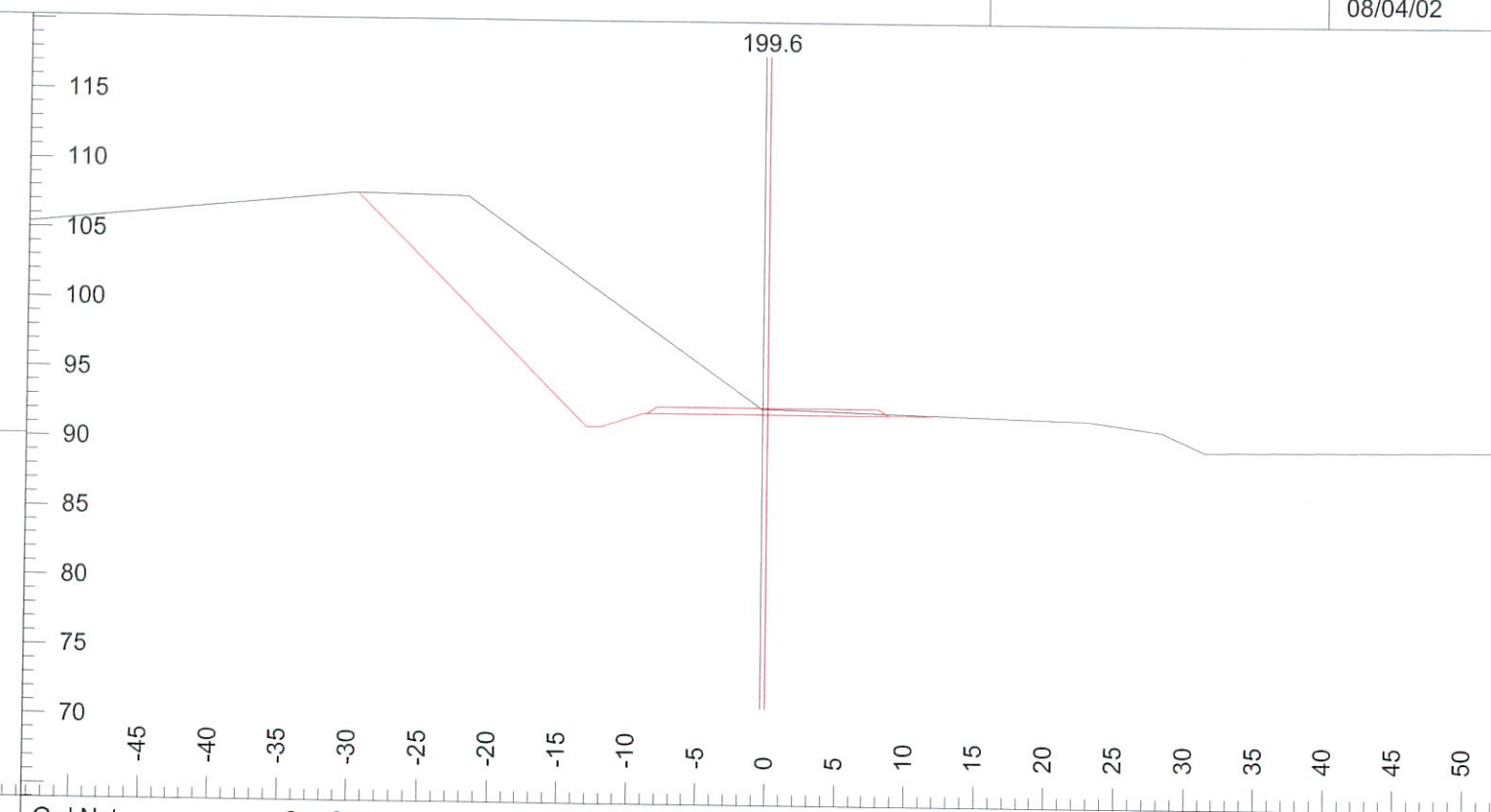

Grd.Nxt.	-3	Ssr:	-3	Cut Dp:	0.4	Stk L:	33.3
Grd.Lst:	-3	F Slope L:	100	P-Clr L:	38.6	Stk R:	11.9
Ssl:	3	F Slope R:	0	P-Clr R:	20.4		

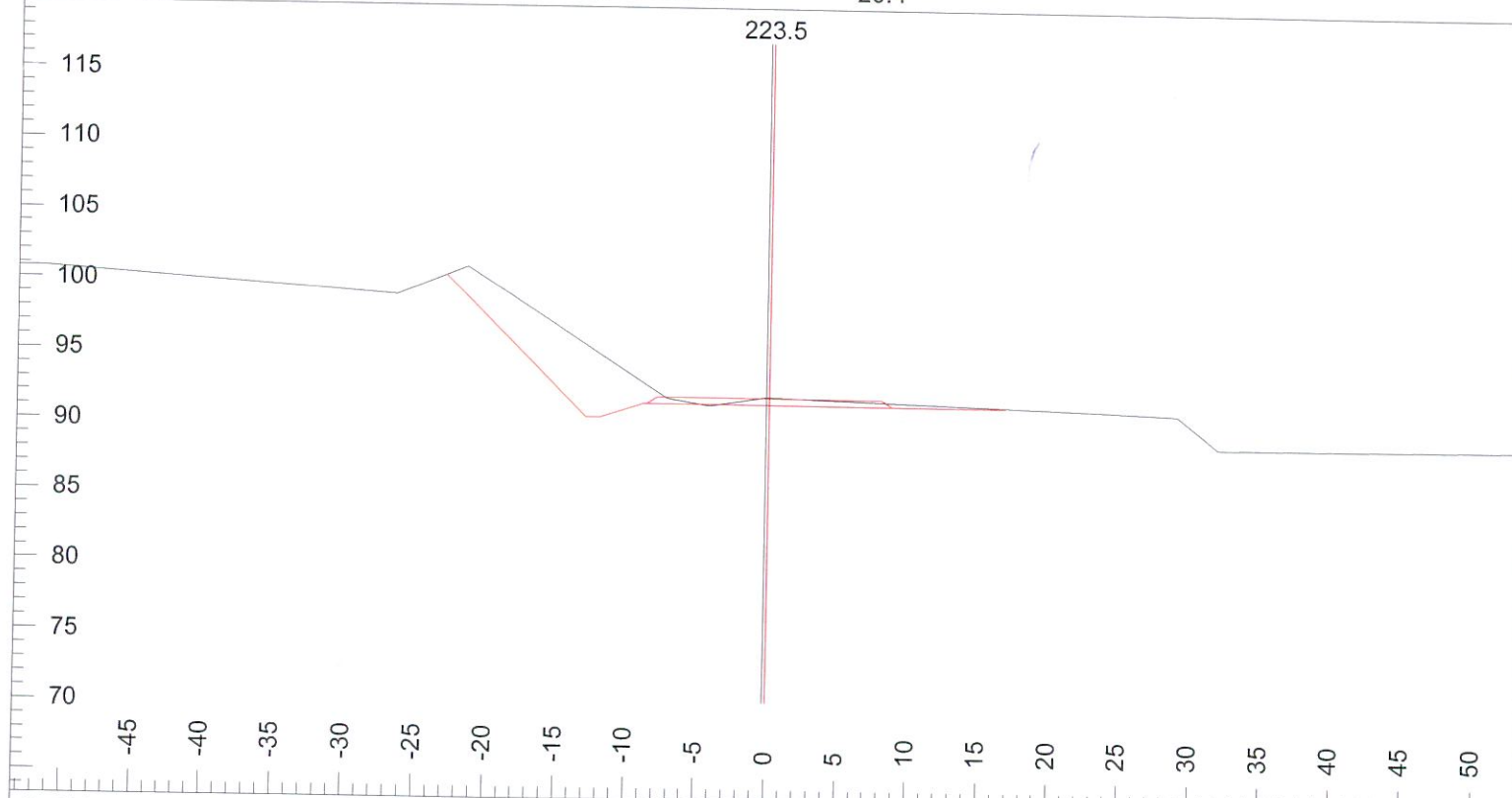

Grd.Nxt.	-3	Ssr:	-3	Cut Dp:	0.5	Stk L:	24.5
Grd.Lst:	-3	F Slope L:	100	P-Clr L:	29.6	Stk R:	16.8
Ssl:	3	F Slope R:	0	P-Clr R:	22.0		

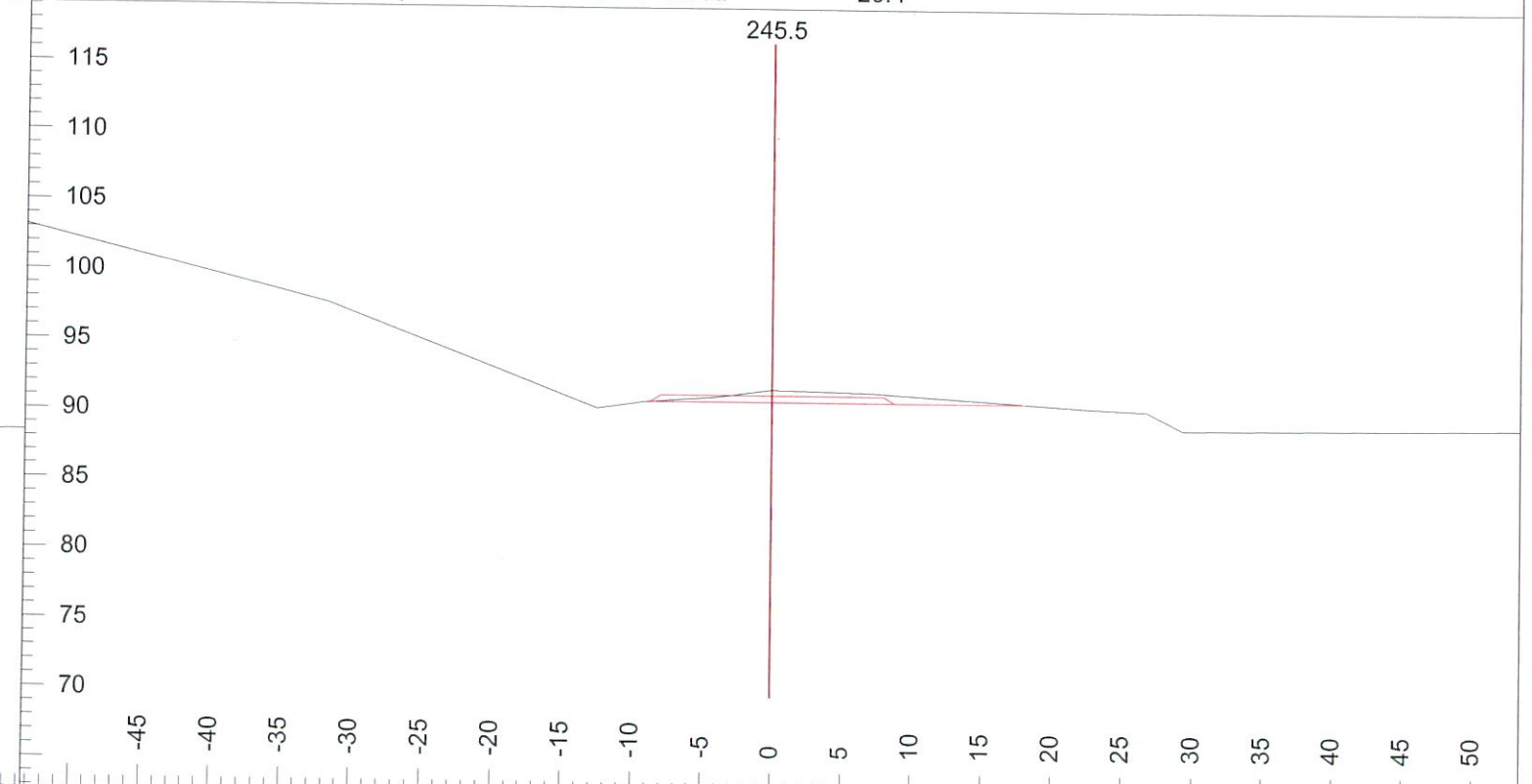

Grd.Nxt.	-3	Ssr:	-2	Cut Dp:	0.8	Stk L:	9.1
Grd.Lst:	-3	F Slope L:	-67	P-Clr L:	20.0	Stk R:	18.1
Ssl:	2	F Slope R:	0	P-Clr R:	23.2		

ROADENG Section

C:\Program Files\Softree\RoadEng\Data\7 mile bridge\7 mile

Scale 1:161

P. 3

08/04/02

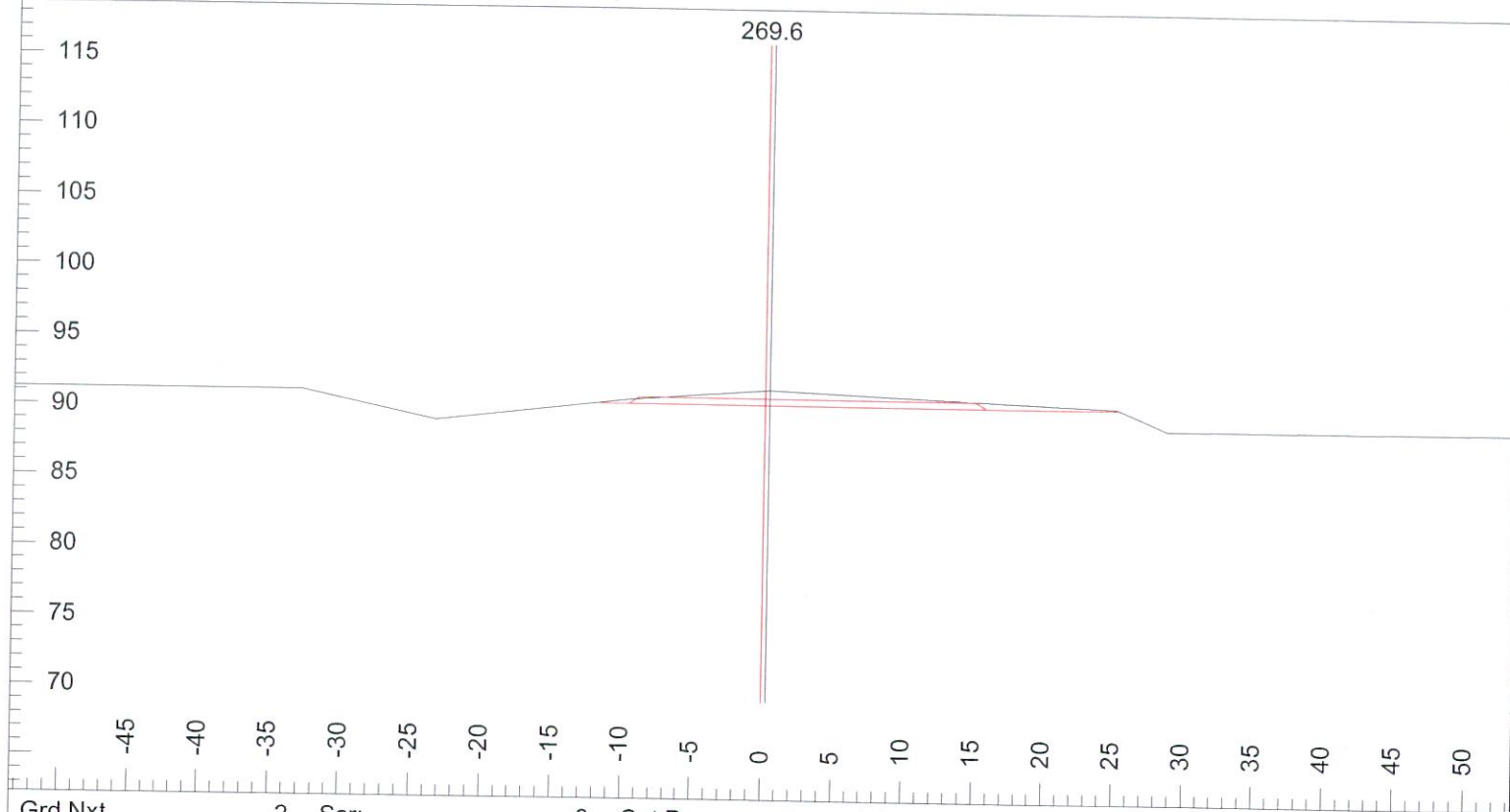

Grd.Nxt.	2	Ssr:	8	Cut Dp:	1.0	Stk L:	12.0
Grd.Lst:	2	F Slope L:	0	P-Clr L:	20.4	Stk R:	25.3
Ssl:	-8	F Slope R:	0	P-Clr R:	30.0		

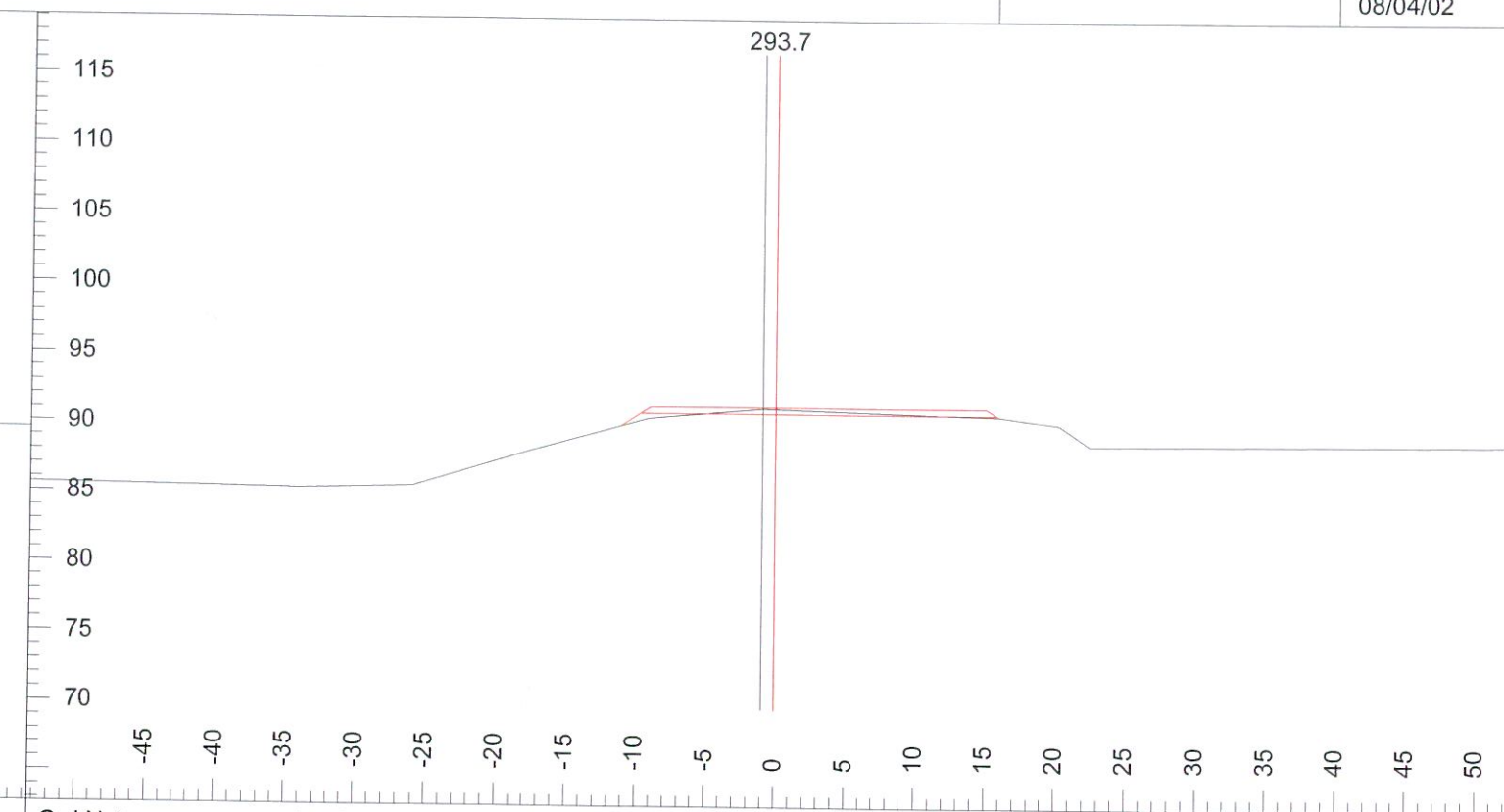

Grd.Nxt.	2	Ssr:	-3	Cut Dp:	0.4	Stk L:	11.2
Grd.Lst:	2	F Slope L:	-67	P-Clr L:	19.2	Stk R:	15.9
Ssl:	3	F Slope R:	-67	P-Clr R:	21.9		

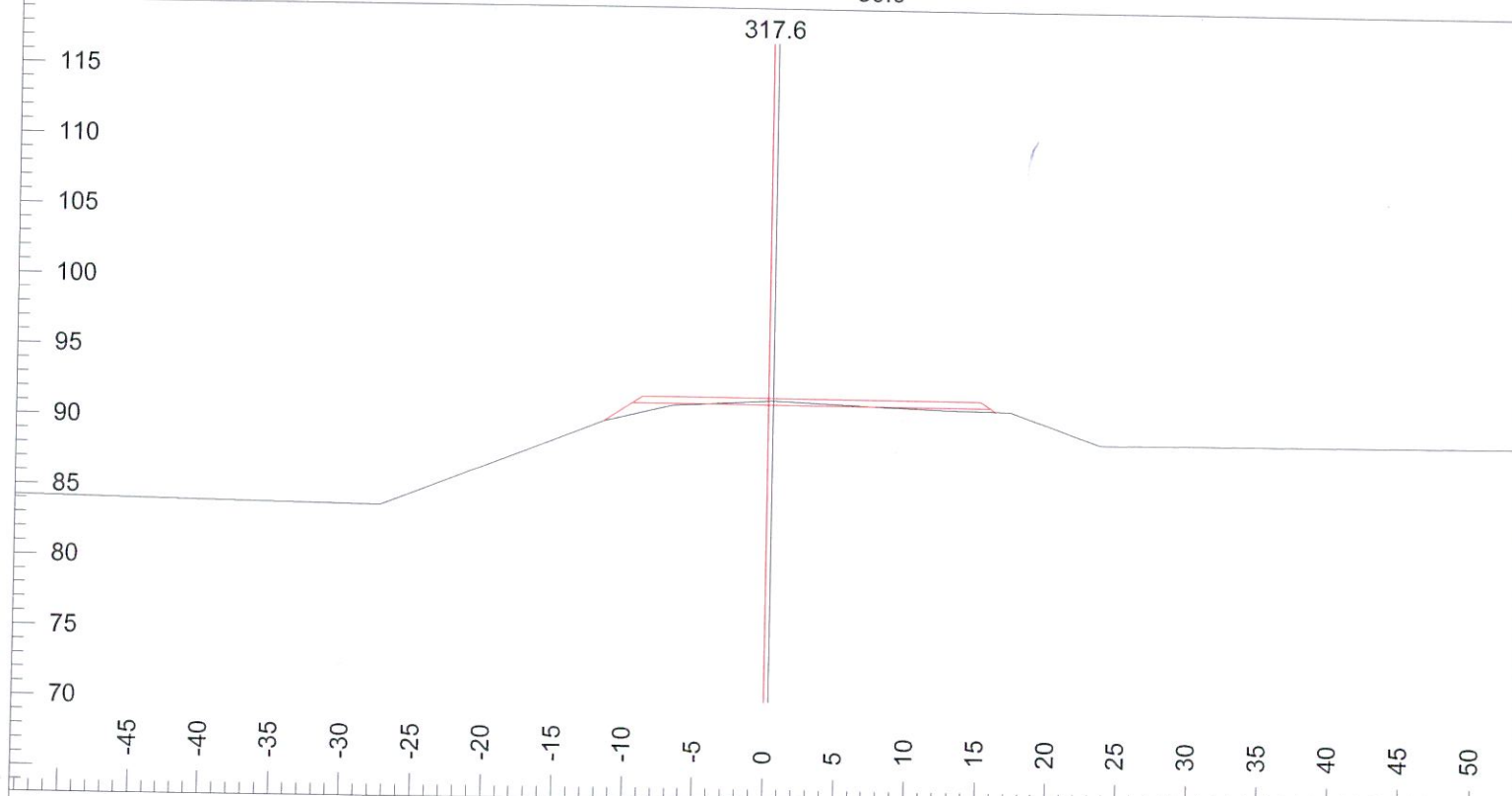

Grd.Nxt.	1	Ssr:	6	Cut Dp:	0.2	Stk L:	11.9
Grd.Lst:	1	F Slope L:	-67	P-Clr L:	20.5	Stk R:	16.1
Ssl:	-6	F Slope R:	-67	P-Clr R:	20.8		

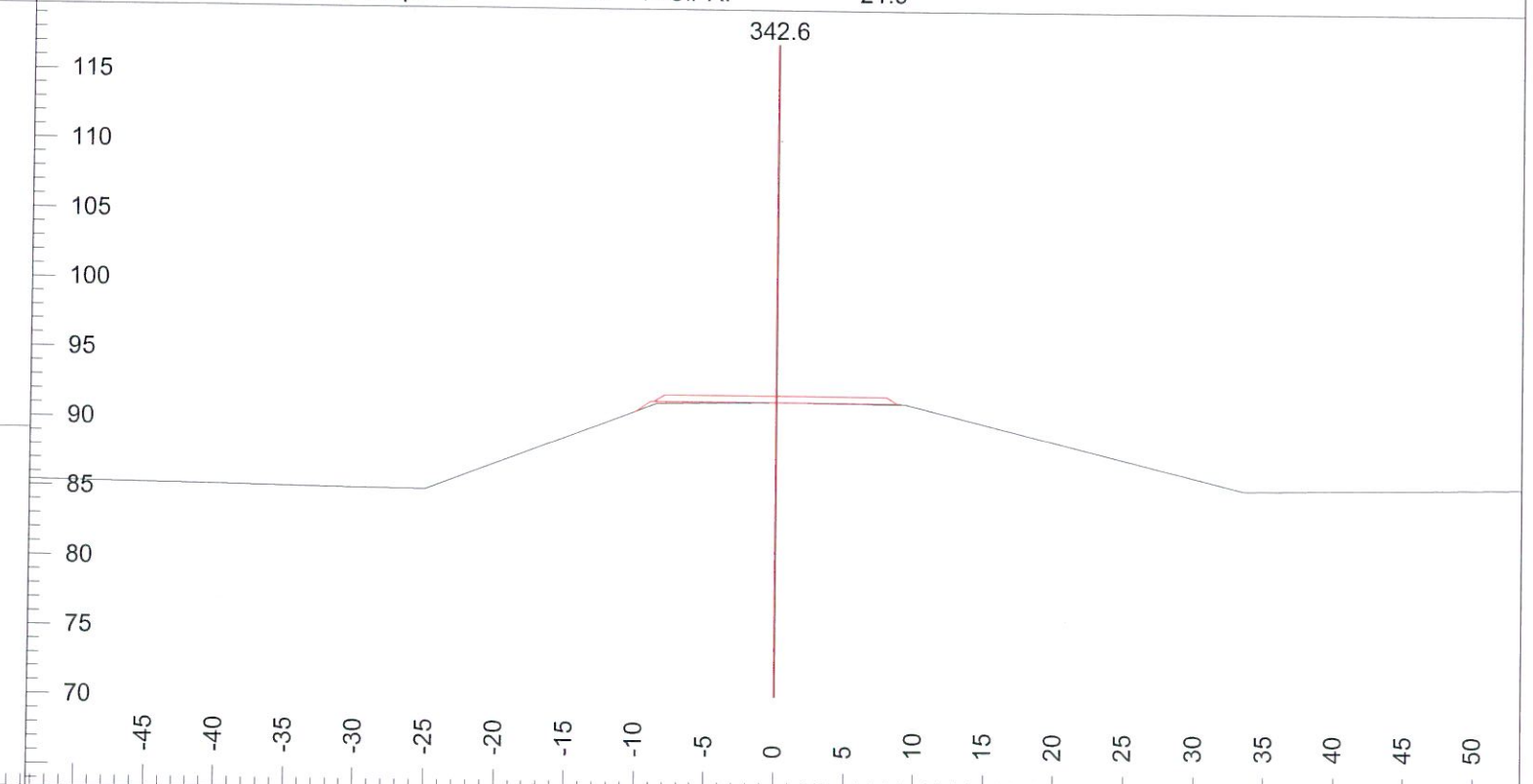

Grd.Nxt.	0	Ssr:	-1	Cut Dp:	0.0	Stk L:	10.2
Grd.Lst:	0	F Slope L:	-67	P-Clr L:	20.1	Stk R:	9.1
Ssl:	-2	F Slope R:	-67	P-Clr R:	20.0		

ROADENG Section

C:\Program Files\Softree\RoadEng\Data\7 mile bridge\7 mile

Scale 1:161

P. 4

08/04/02

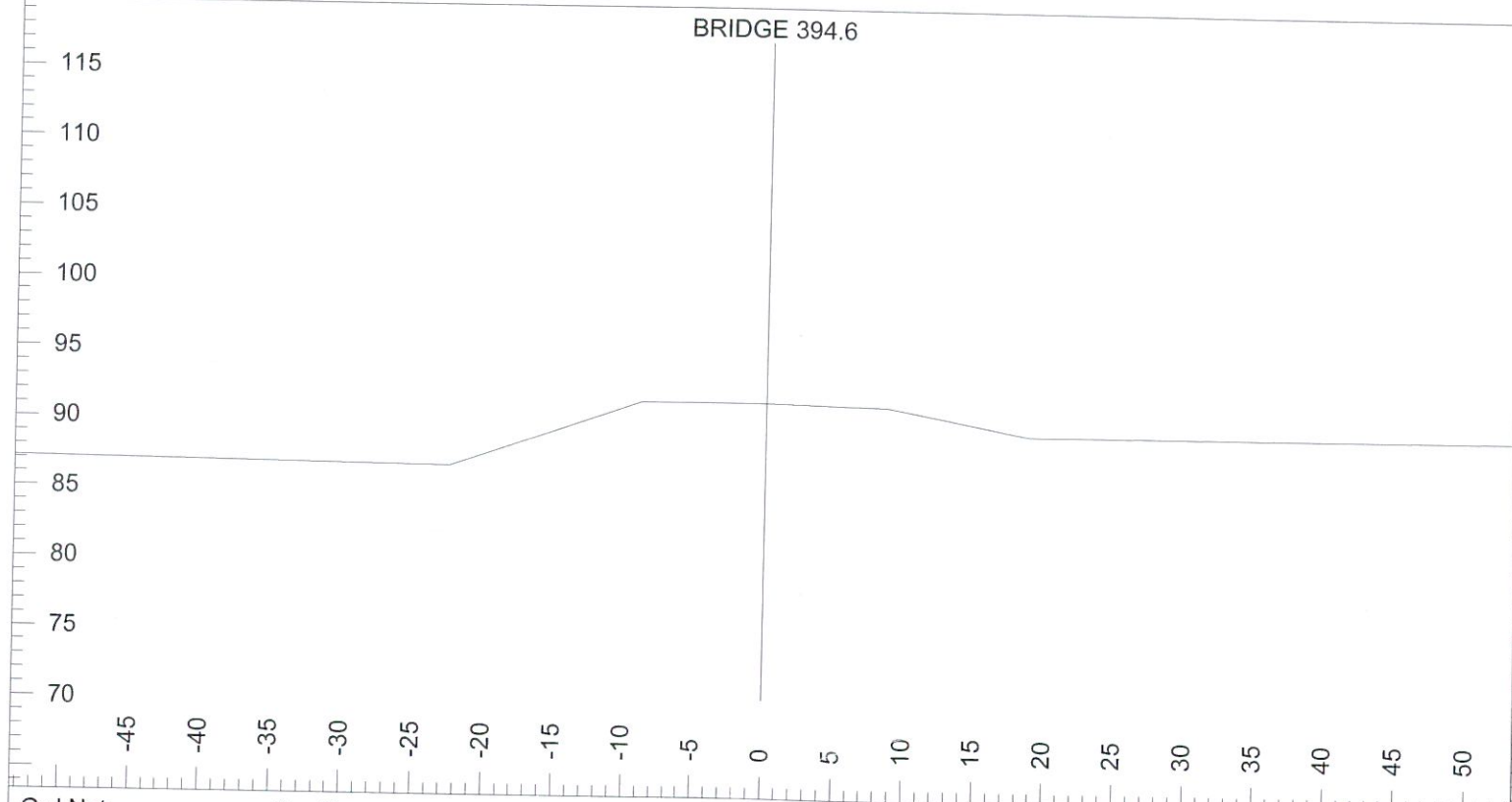

Grd.Nxt.	0	Ssr:	-2	Cut Dp:	0.0	Stk L:	
Grd.Lst:	0	F Slope L:		P-Clr L:		Stk R:	
Ssl:	0	F Slope R:		P-Clr R:			

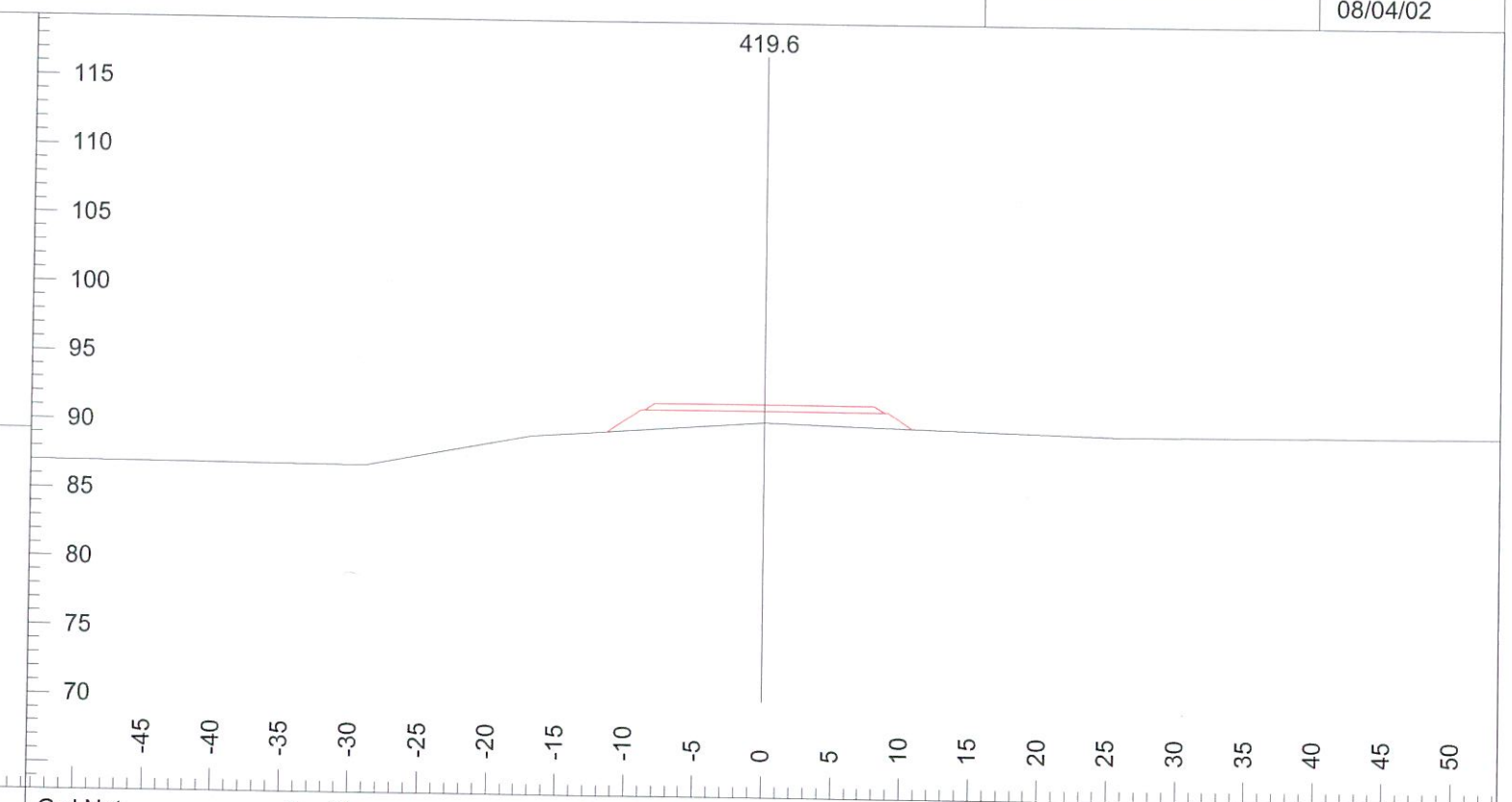

Grd.Nxt.	-2	Ssr:	-3	Cut Dp:	-0.9	Stk L:	11.6
Grd.Lst:	-2	F Slope L:	-67	P-Clr L:	20.1	Stk R:	10.8
Ssl:	-7	F Slope R:	-67	P-Clr R:	20.0		

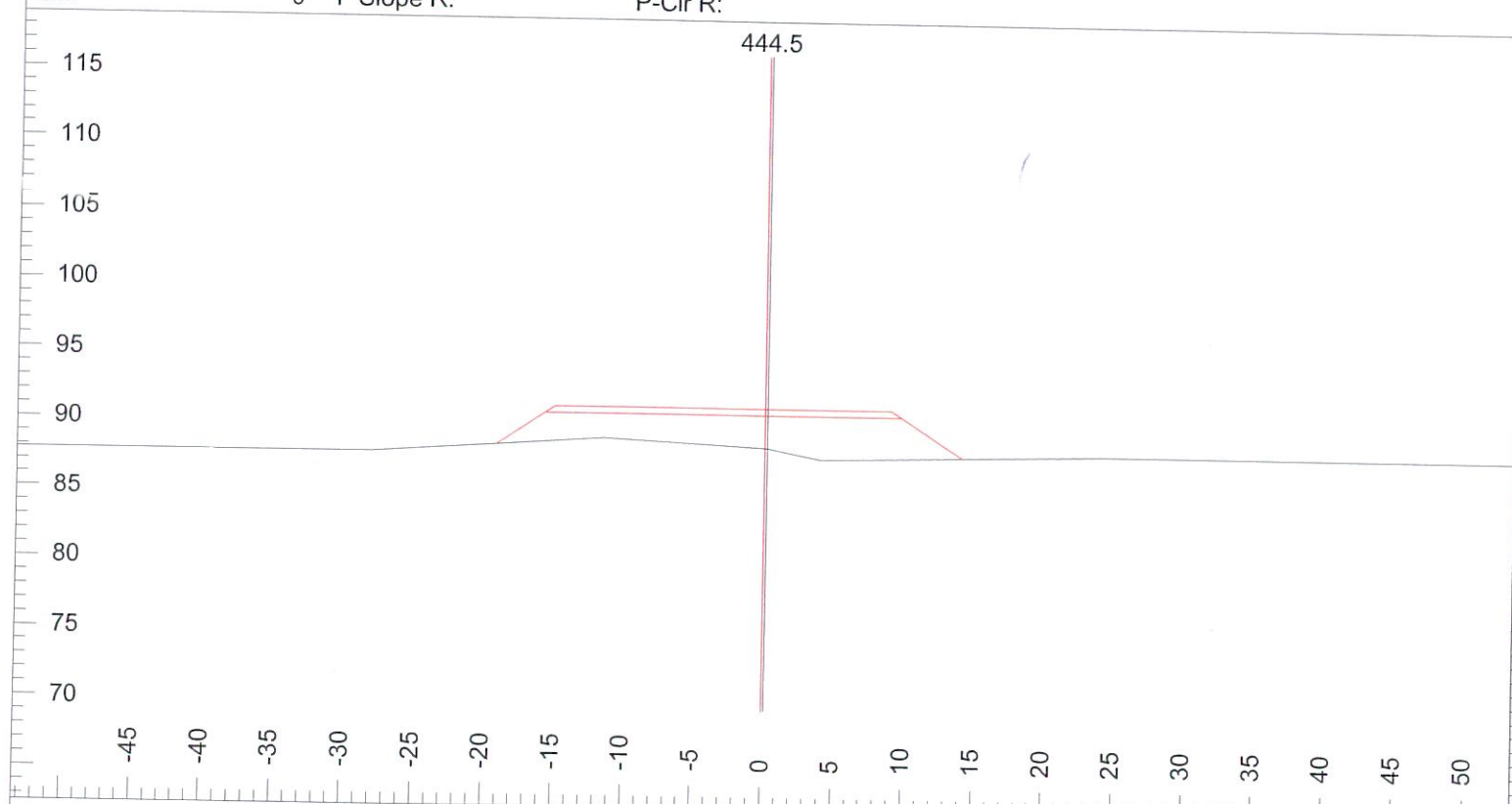

Grd.Nxt.	-2	Ssr:	-5	Cut Dp:	-2.4	Stk L:	19.2
Grd.Lst:	-2	F Slope L:	-67	P-Clr L:	24.4	Stk R:	14.1
Ssl:	5	F Slope R:	-67	P-Clr R:	19.9		

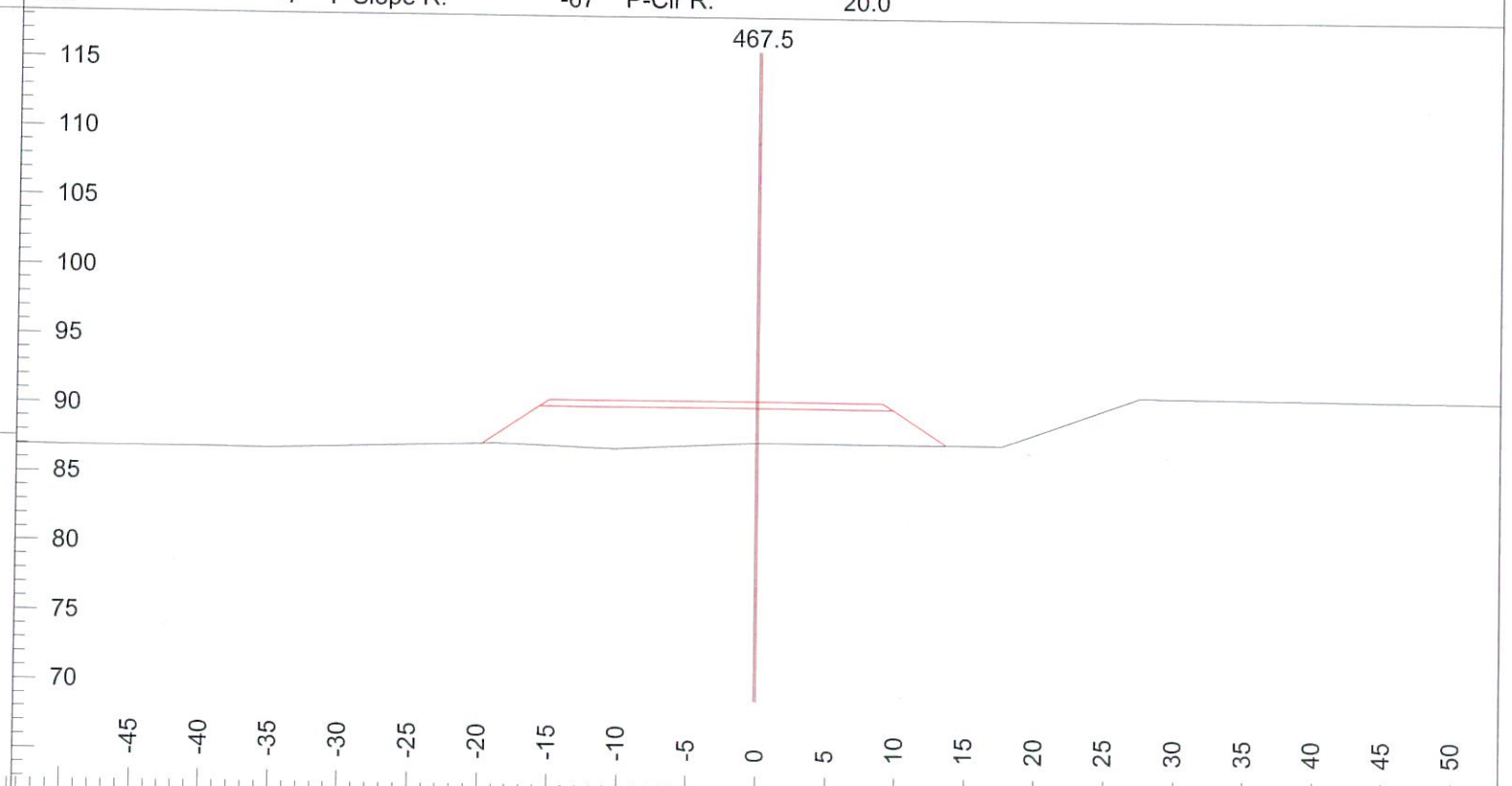

Grd.Nxt.	-2	Ssr:	0	Cut Dp:	-2.6	Stk L:	19.9
Grd.Lst:	-2	F Slope L:	-67	P-Clr L:	24.7	Stk R:	13.6
Ssl:	0	F Slope R:	-67	P-Clr R:	20.2		

ROADENG Section

C:\Program Files\Softree\RoadEng\Data\7 mile bridge\7 mile

Scale 1:161

08/04/02

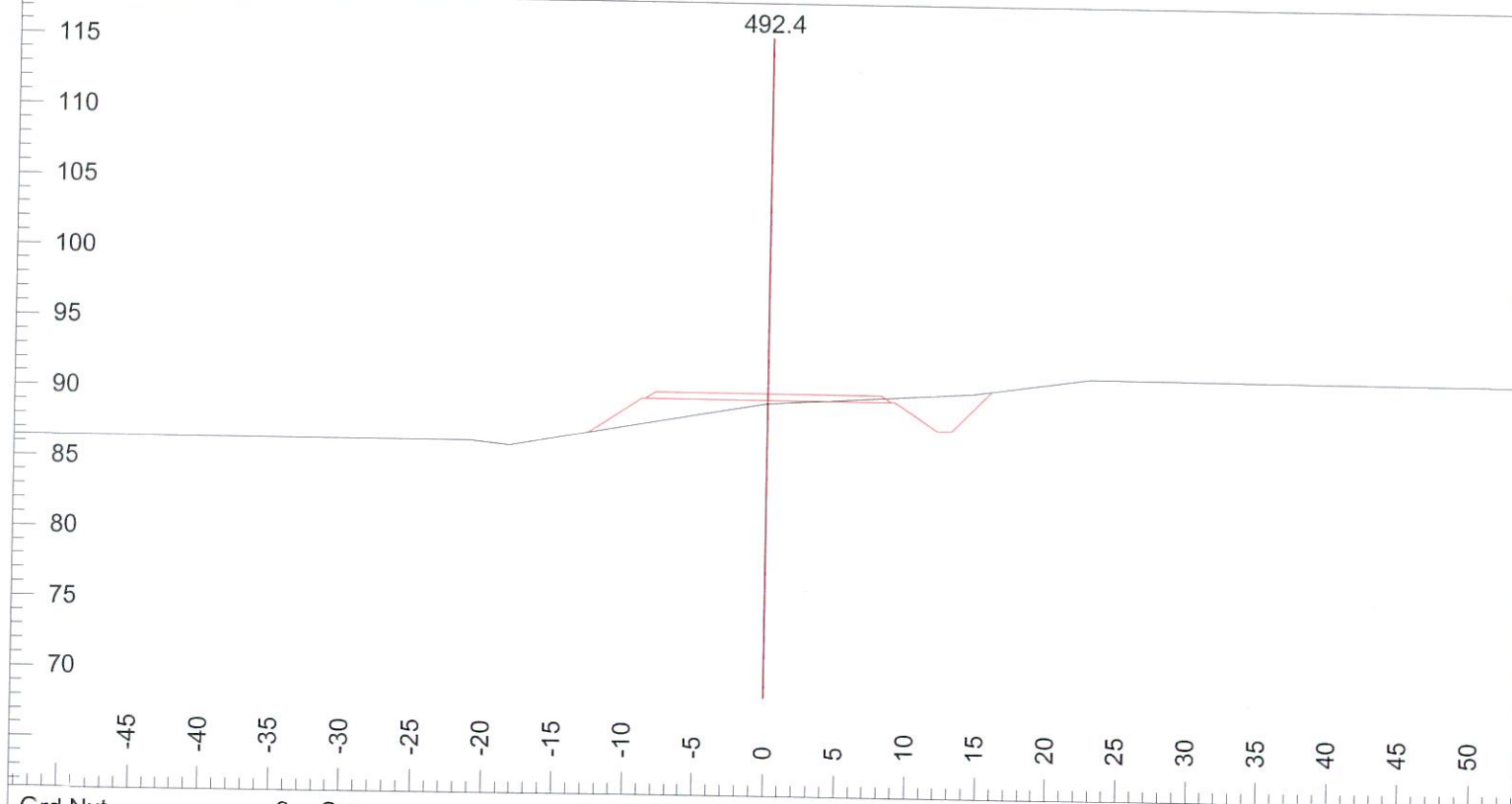

Grd.Nxt.	-2	Ssr:	6	Cut Dp:	-0.2	Stk L:	13.0
Grd.Lst:	-2	F Slope L:	-67	P-Clr L:	20.3	Stk R:	15.8
Ssl:	-18	F Slope R:	100	P-Clr R:	20.9		

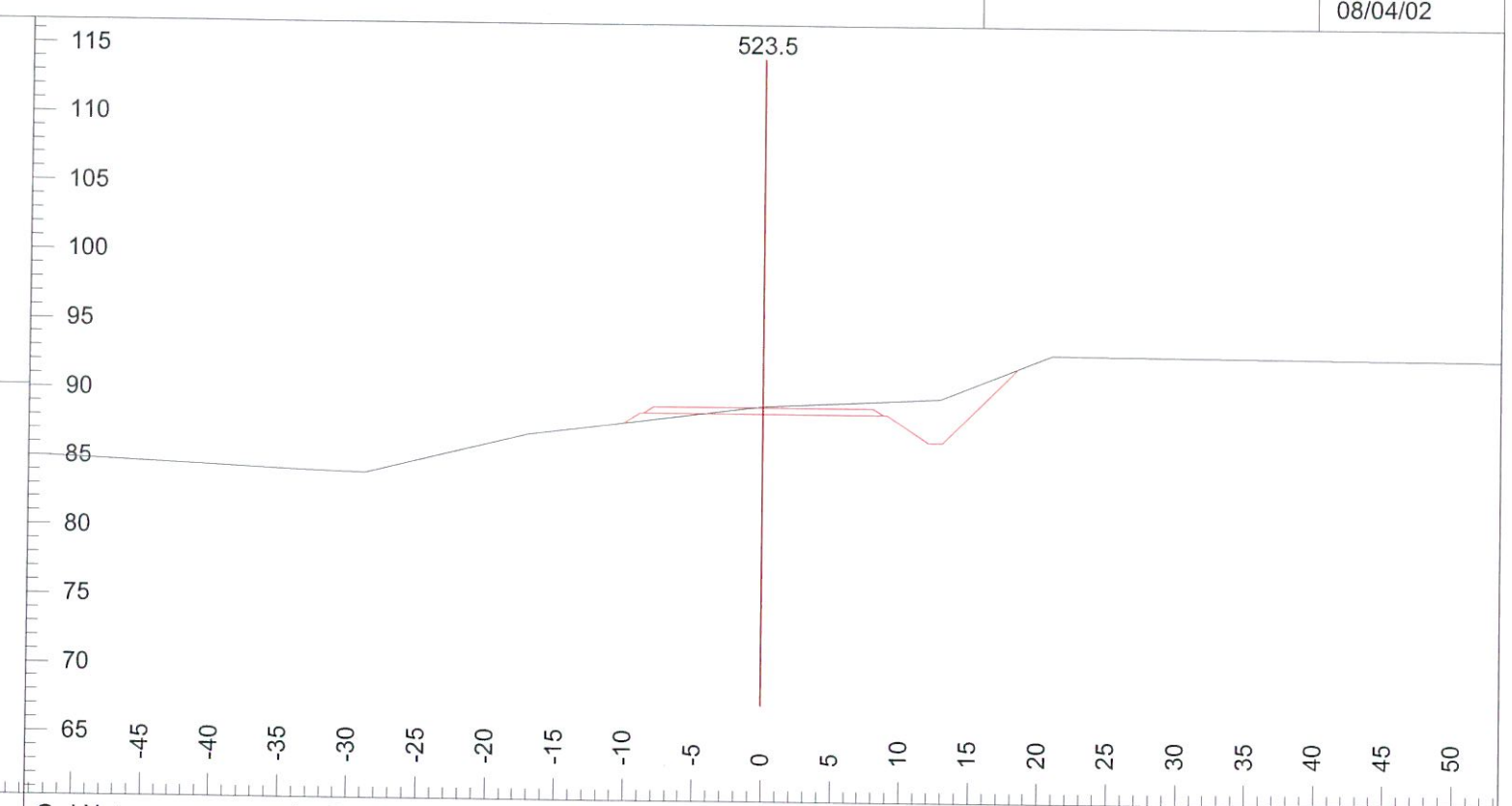

Grd.Nxt.	-4	Ssr:	5	Cut Dp:	0.5	Stk L:	10.2
Grd.Lst:	-4	F Slope L:	-67	P-Clr L:	20.1	Stk R:	18.6
Ssl:	-13	F Slope R:	100	P-Clr R:	23.7		

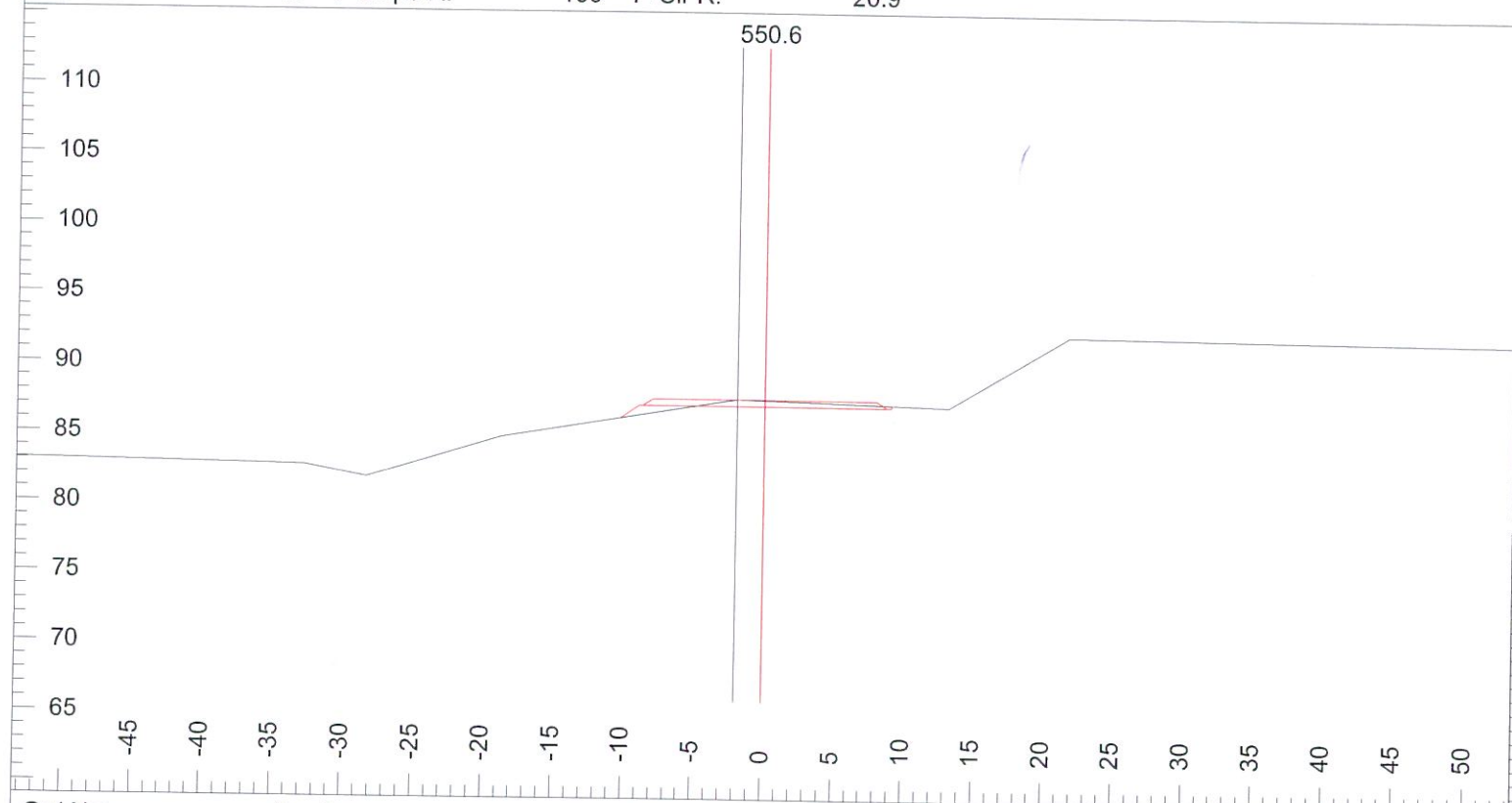

Grd.Nxt.	-5	Ssr:	-3	Cut Dp:	0.4	Stk L:	10.5
Grd.Lst:	-5	F Slope L:	-67	P-Clr L:	18.3	Stk R:	9.2
Ssl:	3	F Slope R:	100	P-Clr R:	22.0		

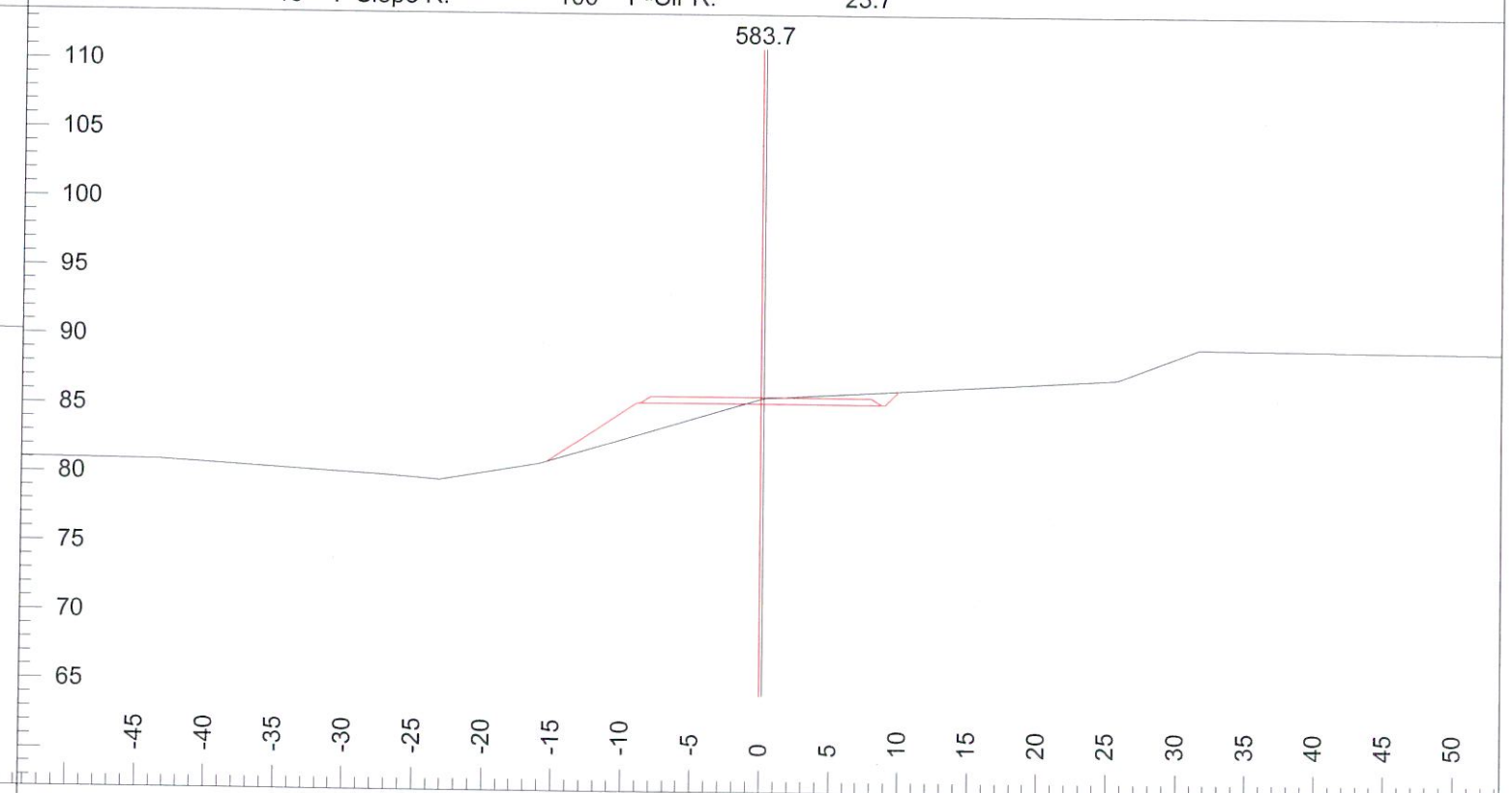

Grd.Nxt.	-5	Ssr:	30	Cut Dp:	0.3	Stk L:	16.2
Grd.Lst:	-5	F Slope L:	-67	P-Clr L:	21.5	Stk R:	10.0
Ssl:	-30	F Slope R:	100	P-Clr R:	19.9		

ROADENG Section

C:\Program Files\Softree\RoadEng\Data\7 mile bridge\7 mile

Scale 1:161

P. 6

08/04/02

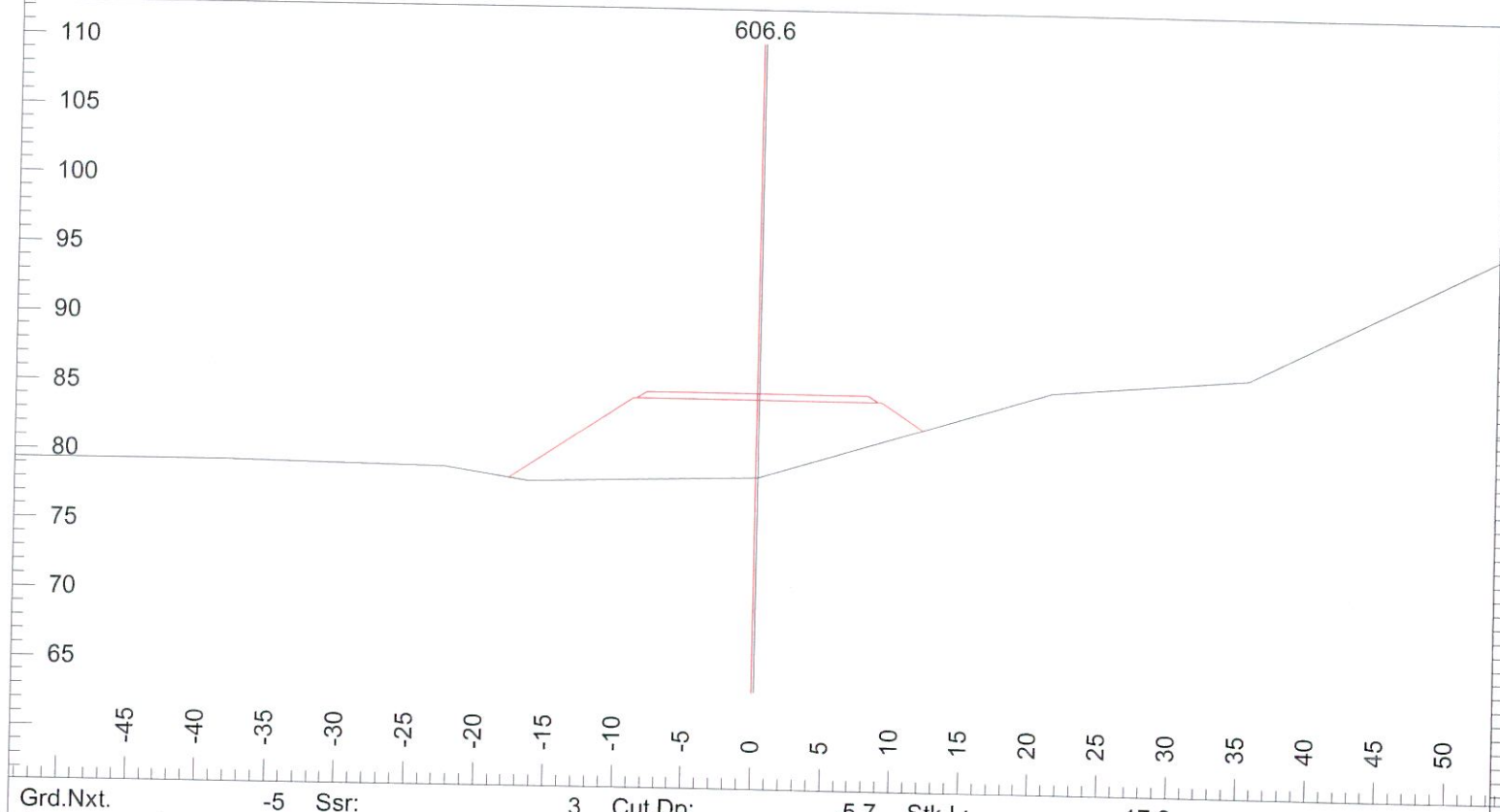

Grd.Nxt.	-5	Ssr:	3	Cut Dp:	-5.7	Stk L:	17.9
Grd.Lst:	-5	F Slope L:	-67	P-Clr L:	23.0	Stk R:	12.5
Ssl:	-3	F Slope R:	-67	P-Clr R:	20.8		

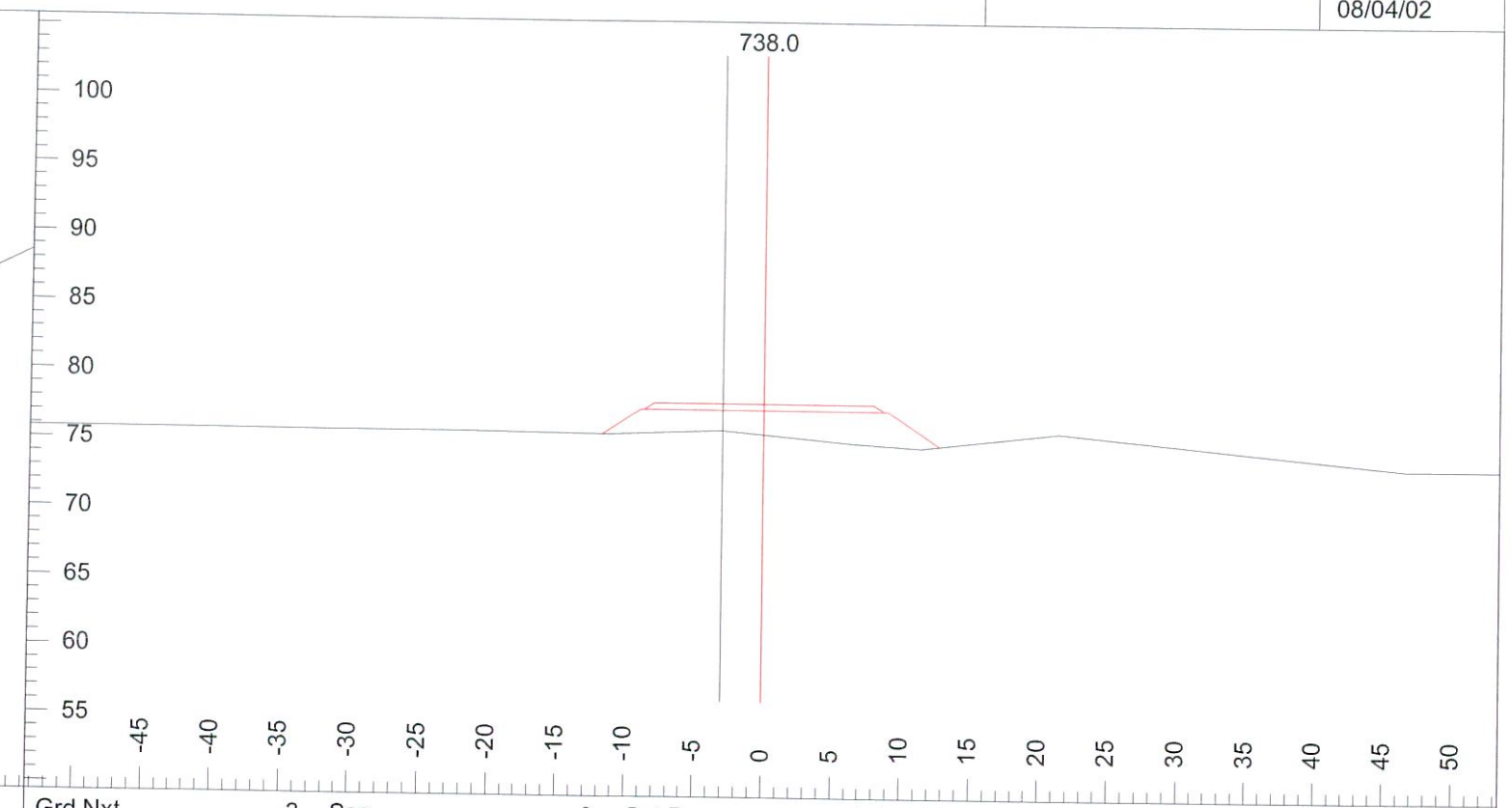

Grd.Nxt.	-3	Ssr:	-9	Cut Dp:	-1.8	Stk L:	11.8
Grd.Lst:	-3	F Slope L:	-67	P-Clr L:	16.9	Stk R:	12.8
Ssl:	9	F Slope R:	-67	P-Clr R:	23.1		

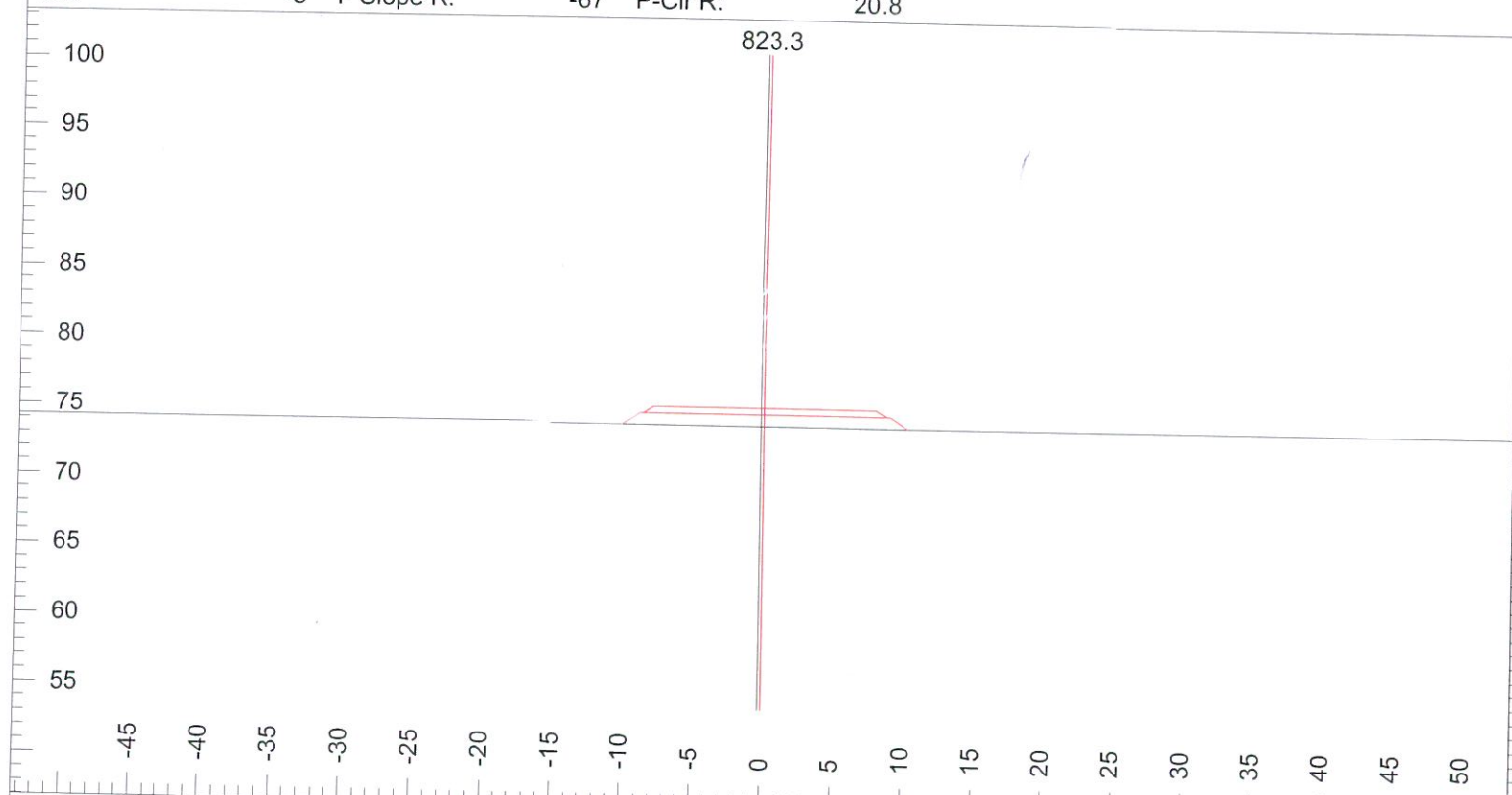

Grd.Nxt.	-3	Ssr:	0	Cut Dp:	-0.8	Stk L:	10.3
Grd.Lst:	-3	F Slope L:	-67	P-Clr L:	19.8	Stk R:	10.3
Ssl:	0	F Slope R:	-67	P-Clr R:	20.2		

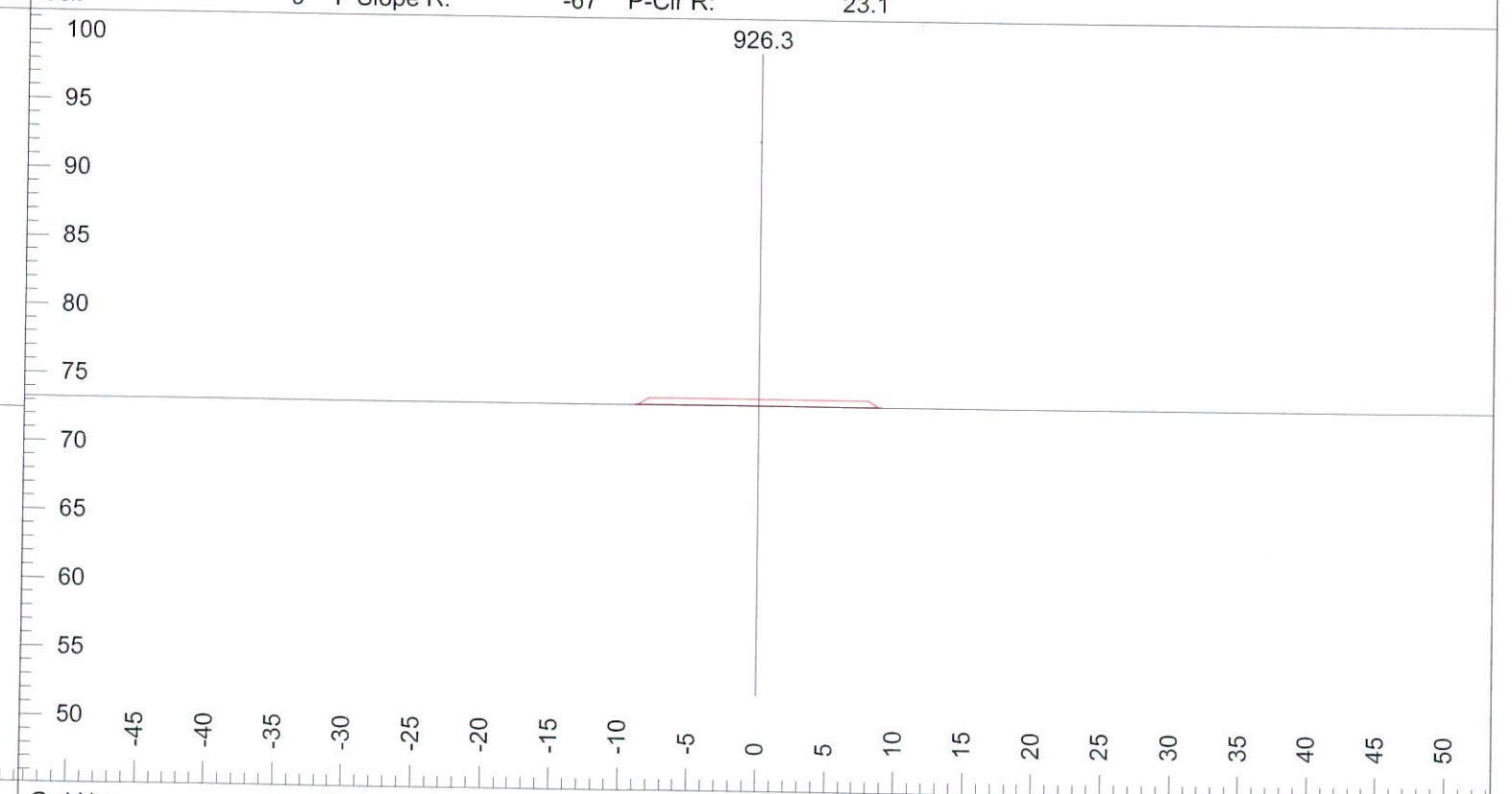

Grd.Nxt.	n/a	Ssr:	0	Cut Dp:	-0.1	Stk L:	9.1
Grd.Lst:	n/a	F Slope L:	-67	P-Clr L:	20.0	Stk R:	9.1
Ssl:	0	F Slope R:	-67	P-Clr R:	20.0		